LECTURE NOTES

ON

METROLOGY AND MEASUREMENTS

IV B. Tech I Semester (JNTUA-R19)

Mr. P. KUMAR M.Tech, (Ph.D)
Associate Professor

VEMU INSTITUTE OF TECHNOLOGY

APPROVED BY AICTE, NEW DELHI & APPLIATED TO JNTUA, ANATAPURAMU

P. KOTHA KOTA, NEAR PAKALA, CHITTOOR-517112

Department of Mechanical Engineering

Co number	**METROLOGY AND MEASUREMENTS (20A03503T)**	**BTL**
C313.1	Analyze the various measuring instruments used in metrology.	4
C313.2	Understand the geometry of screw threads and gear profiles	2
C313.3	Analyze working of various instruments used for displacement, temperature and pressure.	5,2
C313.4	Analyze various instruments used for measuring for flow, speed, stress, strain and Vibration.	2
C314.5	Apply the measure force torque and pressure.	3

Unit-1

Concept Of Measurement

Unit I

SYSTEM OF LIMITS, FITS, TOLERANCE AND GAUGING

CONTENTS

2.1 Definition

2.2 Limits of Size & Tolerance

2.3 System of Fits

2.4 Geometrical Tolerances

2.5 System of Tolerances

2.6Comparators

2.6.1 Classification of comparators

2.6.2 Mechanical Comparator

2.6.3 Electrical Comparators

2.6.4 Pneumatic Comparators (Solex Gauge)

OBJECTIVES

Students will be able to

1 Understand the basic principles of fits and tolerances,
2 Explain various types of fits and their applications,
3 Analyses the various types of tolerances and applications, and
4 Know the fundamental of the systems of fits.

2.1 Definition:

Limits

The maximum and minimum permissible sizes within which the actual size of a component lies are called Limits.

Tolerance:

It is impossible to make anything to an exact size, therefore it is essential to allow a definite tolerance or permissible variation on every specified dimension.

Why Tolerances are specified?

· Variations in properties of the material being machined introduce errors.

· The production machines themselves may have some inherent inaccuracies.

· It is impossible for an operator to make perfect settings. While setting up the tools and workpiece on the machine, some errors are likely to creep in.

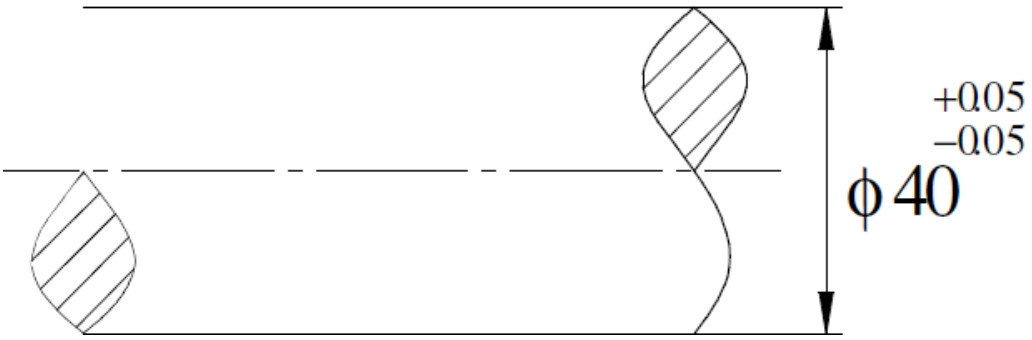

Consider the dimension shown in fig. When trying to achieve a diameter of 40 mm (Basicor Nominal diameter), a variation of 0.05 mm on either side may result. If the shaft is satisfactory even if its diameter lies between 40.05 mm & 39.95 mm, the dimension 40.05 mm is known as Upper limit and the dimension 39.95 mm is known as Lower limit of size. Tolerance in the above example is (40.05-39.95) =0.10 mm Tolerance is always a positive quantitative number.

Unilateral Tolerance:

· Tolerances on a dimension may either be unilateral or bilateral.

· When the two limit dimensions are only on one side of the nominal size, (either above or below) the tolerances are said to be unilateral.

· For unilateral tolerances, a case may occur when one of the limits coincide with the basic size.

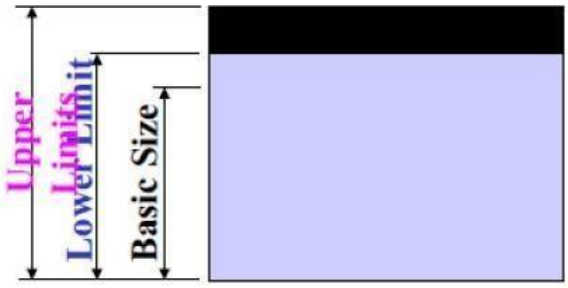

e.g. $Ø25^{+0.18}_{+0.10}$

Basic Size = 25.00 mm
Upper Limit = 25.18 mm
Lower Limit = 25.10 mm
Tolerance = **0.08 mm**

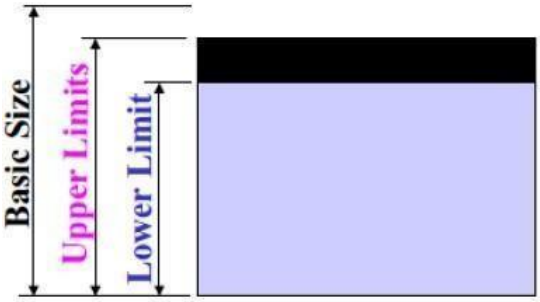

e.g. $Ø25^{-0.10}_{-0.20}$

Basic Size = 25.00 mm
Upper Limit = 24.90 mm
Lower Limit = 24.80 mm
Tolerance = **0.10 mm**

Bilateral Tolerance: When the two limit dimensions are above and below nominal size,(i.e. on either side of the nominal size) the tolerances are said to be bilateral. Unilateral tolerances, are preferred over bilateral because the operator can machine to the upper limit of the shaft (or lower limit of a hole) still having the whole tolerance left for machining to avoid rejection of parts.

Schematic representation of tolerances:

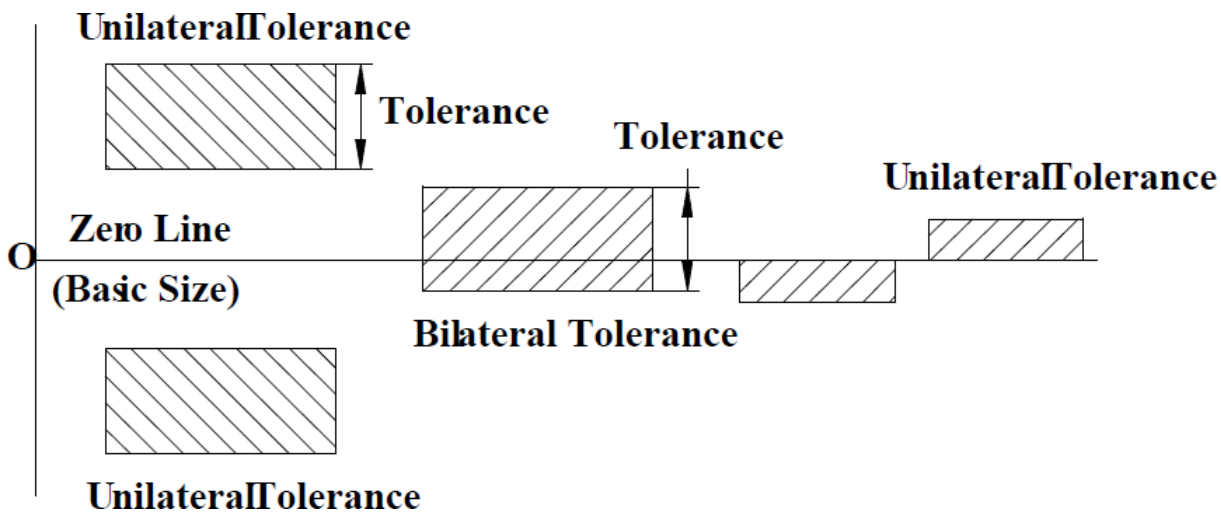

Tolerance Accumulation (or) Tolerance Build up:

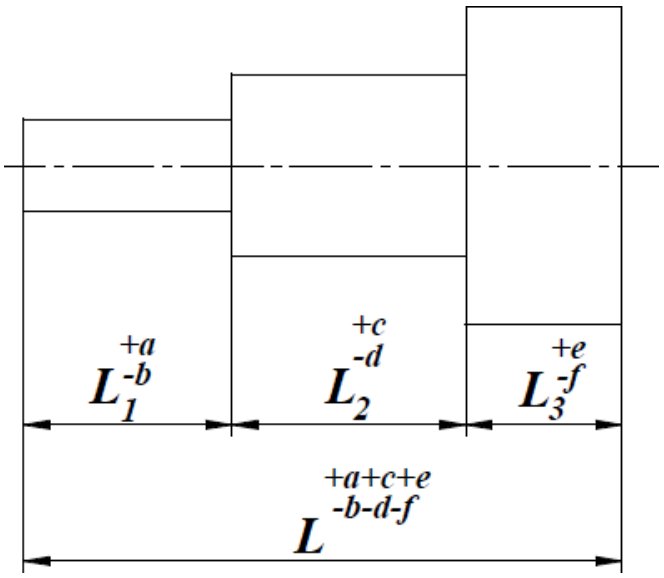

If a part comprises of several steps, each step having some tolerance specified over its length, then the overall tolerance on the complete length will be the sum of tolerances on individual lengths.

The effect of accumulation of tolerances can be minimized by adopting progressive dimensioning from a common datum.

Another example of tolerance build up is shown below.

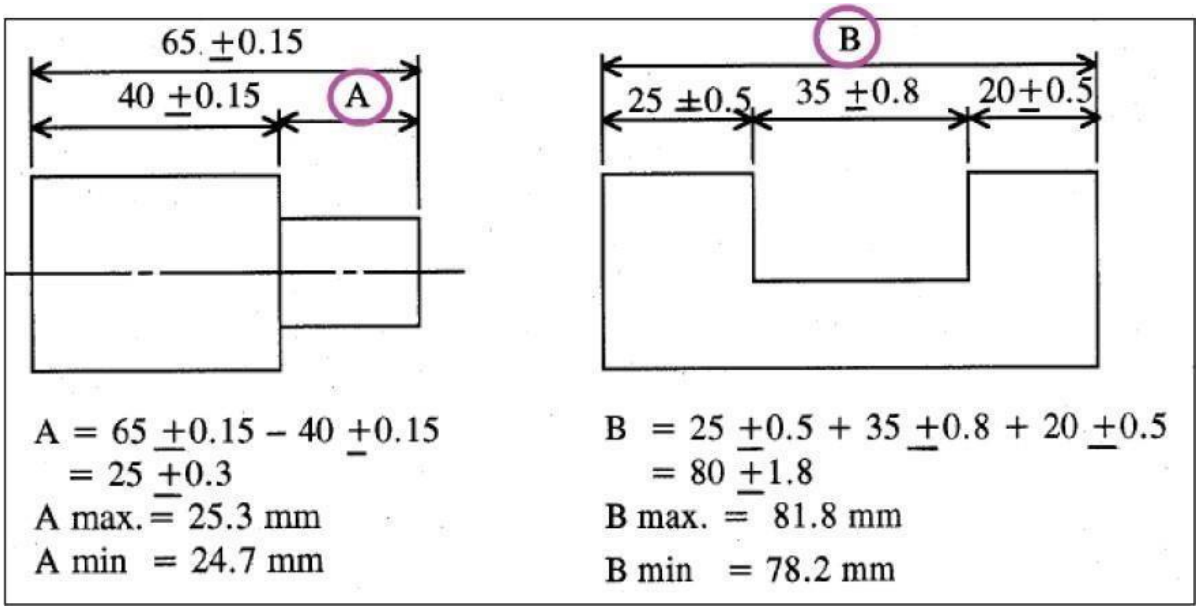

Compound Tolerances:

A compound tolerance is one which is derived by considering the effect of tolerances on more than one dimension.

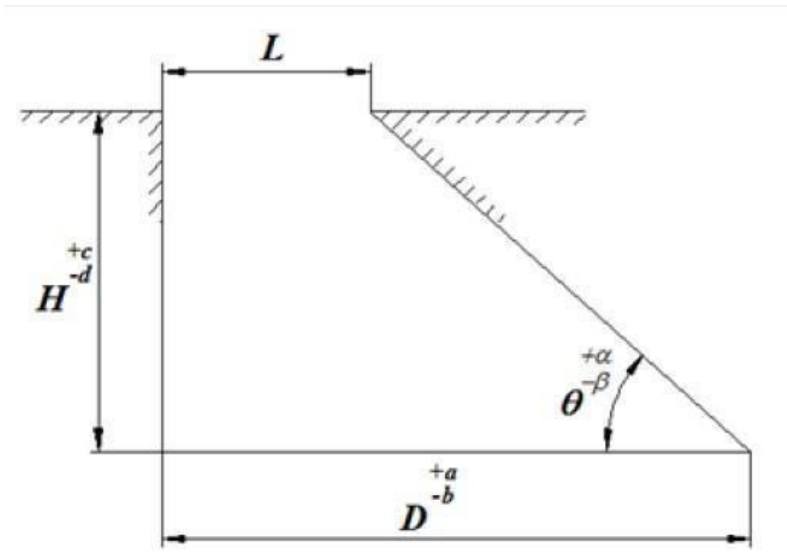

For ex, the tolerance on the dimension L is dependent on the tolerances on D, H & q.

The dimension L will be maximum when the base dimension is (D+a), the angle is (q+a),and the vertical dimension is (H-d).

The dimension L will be minimum when the base dimension is (D-b), the angle is (q-b),and the vertical dimension is (H+c).

2.2 LIMITS OF SIZE & TOLERANCE

Terminology of limit systems:

Limits of size: The two extreme permissible sizes of a component between which the actual size should lie including the maximum and minimum sizes of the component.

Nominal size: It is the size of the component by which it is referred to as a matter of convenience.

Basic size: It is the size of a part in relation to which all limits of variation are determined.

Zero Line: It is the line w.r.t which the positions of tolerance zones are shown**.**

Deviation: It is the algebraic difference between a limit of size and the corresponding basic size.

Upper Deviation: It is the algebraic difference between the maximum limit of size and the corresponding basic size. It is denoted by letters ***'ES'*** for a hole and ***'es'*** for a shaft.

Lower Deviation: It is the algebraic difference between the minimum limit of size and the corresponding basic size. It is denoted by letters ***'EI'*** for a hole and ***'ei'*** for a shaft.

Fundamental Deviation: It is the deviation, either upper or lower deviation, which is nearest to the zero line for either a hole or a shaft. It fixes the position of the tolerance zone in relation to the zero line.

Allowance: It is the intentional difference between the hole dimensions and shaft dimension for any type of fit.

Size of tolerance: It is the difference between the maximum and minimum limits of size.

2.3 SYSTEM OF FITS

Fit is an assembly condition between 'Hole' & 'Shaft'

Hole: A feature engulfing a component.

Shaft: A feature being engulfed by a component.

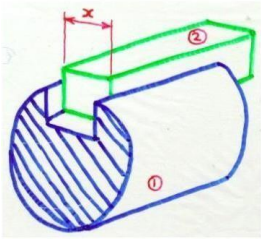

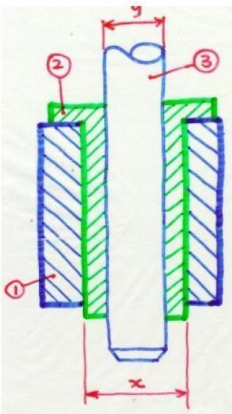

Clearance fit:

In this type of fit, the largest permitted shaft diameter is less than the smallest hole diameter so that the shaft can rotate or slide according to the purpose of the assembly.

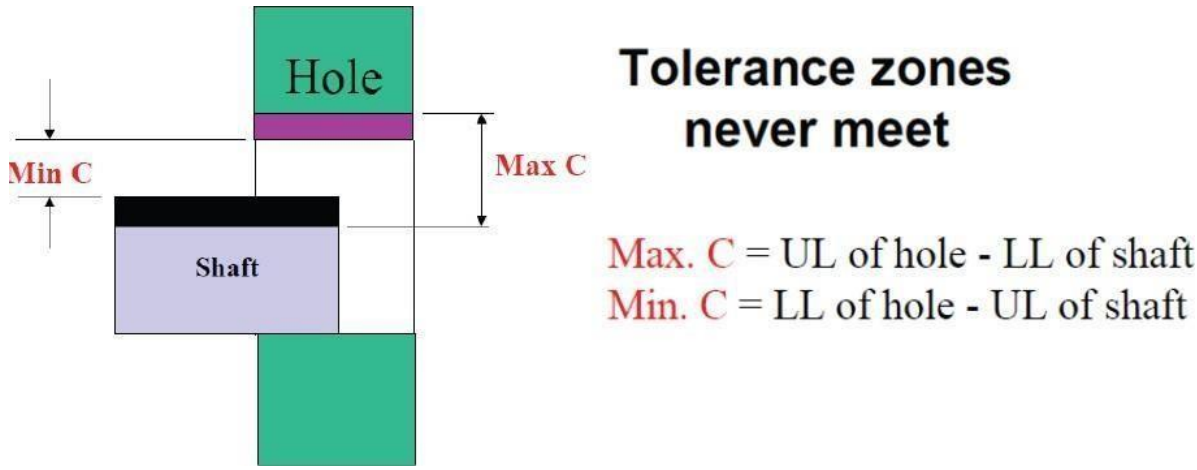

Interference Fit:

It is defined as the fit established when a negative clearance exists between the sizes of holes and the shaft. In this type of fit, the minimum permitted diameter of the shaft is larger than the maximum allowable diameter of the hole. In case of this type of fit, the members are intended to be permanently attached.

Ex: Bearing bushes, Keys & key ways

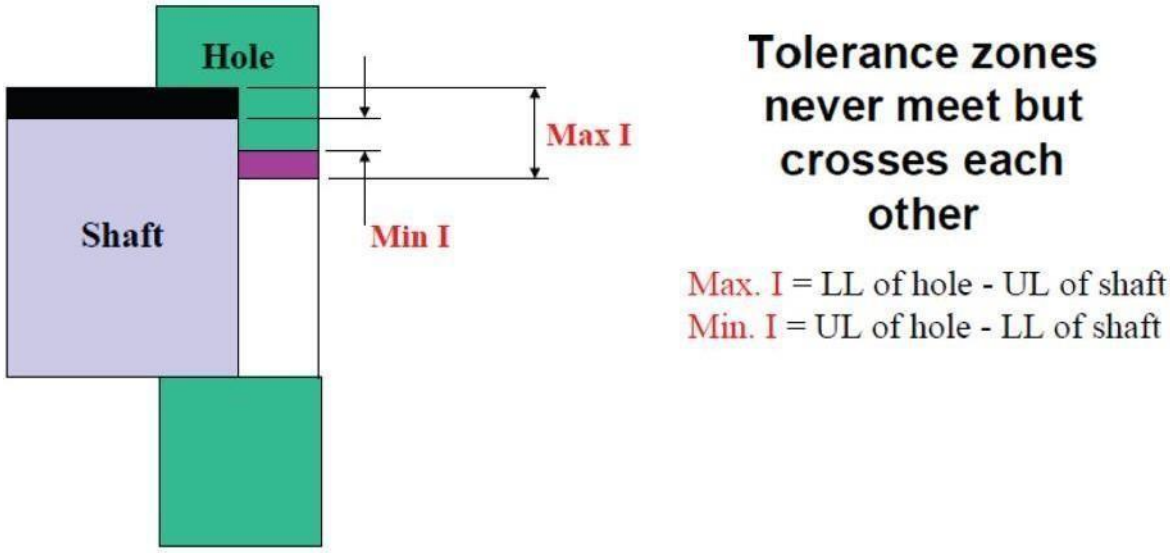

Transition Fit:

In this type of fit, the diameter of the largest allowable hole is greater than the smallest shaft, but the smallest hole is smaller than the largest shaft, such that a small positive or negative clearance exists between the shaft & hole.

Ex: Coupling rings, Spigot in mating holes, etc.

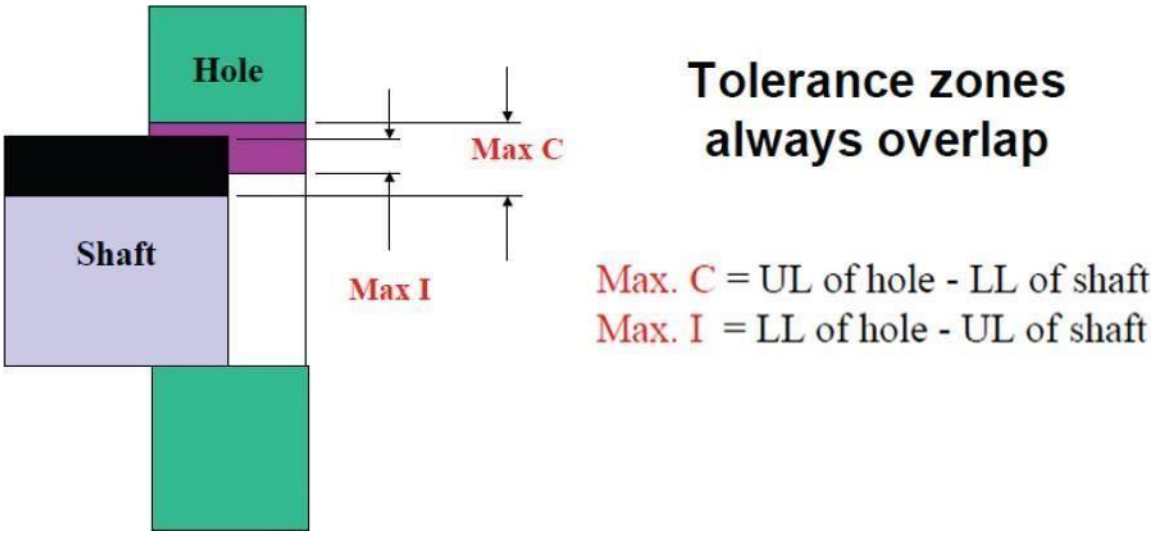

Interchangeability:

Interchangeability occurs when one part in an assembly can be substituted for a similar part which has been made to the same drawing. Interchangeability is possible only when certain standards are strictly followed.

Universal interchangeability means the parts to be assembled are from two different manufacturing sources.

Local interchangeability means all the parts to be assembled are made in the same manufacturing unit.

Selective Assembly:

In selective assembly, the parts are graded according to the size and only matched grades of mating parts are assembled. This technique is most suitable where close fit of two components assembled is required.

Selective assembly provides complete protection against non-conforming assemblies and reduces machining costs as close tolerances can be maintained.

Suppose some parts (shafts & holes) are manufactured to a tolerance of 0.01 mm, then an automatic gauge can separate them into ten different groups of 0.001 mm limit for selective assembly of the individual parts. Thus high quality and low cost can beachieved.

Selective assembly is used in aircraft, automobile industries where tolerances are very narrow and not possible to manufacture at reasonable costs.

2.4 Geometrical Tolerances:

It is necessary to specify and control the geometric features of a component, such as straightness, flatness, roundness, etc. in addition to linear dimensions. Geometric tolerance is concerned with the accuracy of relationship of one component to another and should be specified separately.

Geometrical tolerance may be defined as the maximum possible variation of **form** or **Position of form** or **position of a feature.**

Geometric tolerances define the shape of a feature as opposed to its size. There are three basic types of geometric tolerances:

Form tolerances:

Straightness, flatness, roundness, cylindricity

Orientation tolerances:

Perpendicularity, parallelism, angularity

Position tolerances:

Position, symmetry, concentricity

FORM TOLERANCES

Characteristic or symbol	Function of geometric tolerance	Tolerance zone	Typical example
Straightness	To control the straightness of the line on a surface.	Area between two parallel straight lines in the plane containing the considered line or axis, Tolerance value is the distance between them.	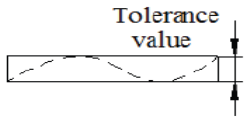
Flatness	To control the flatness of a surface.	Area between two planes. Tolerance value is the distance between them.	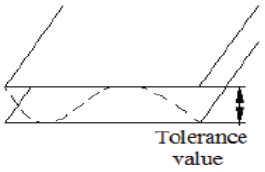

Ronndness 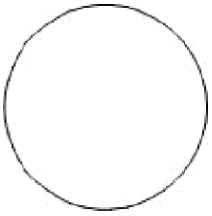	To control the errors of soundness of a circle in the plane in which it lies.	Area between two concentric circles. Tolerance value is the radial distance between them.	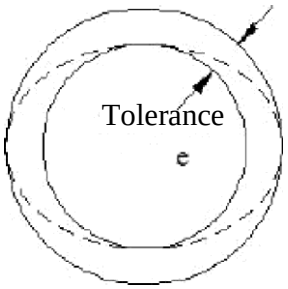
Cylindricity 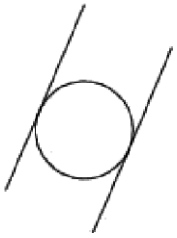	To control combination of soundness, straightness, And parallelism of a cylindrical surface.	Annular space between two cylinders that are co axial. Tolerance value is the radial distance between them.	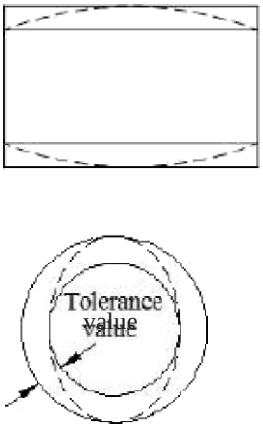

ORIENTATION TOLERANCES			
Parallelism	To control the parallelism of a line or surface w.r.t some datum.	Area between two parallel lines or space between two parallel lines which are parallel to the datum	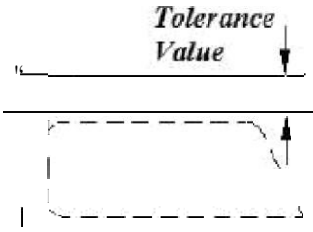
Squareness 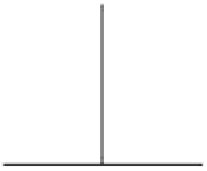	To control the perpendicularity of a line or surface w.r.t a datum.	Area between two parallel lines or space between two parallel lines which are perpendicular to	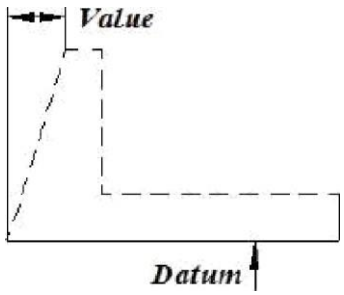

Angularity	To control the inclination of a line or surface w.r.t a datum.	Area between two parallel lines or space between two parallel lines which are inclined at a specified angle to the datum.	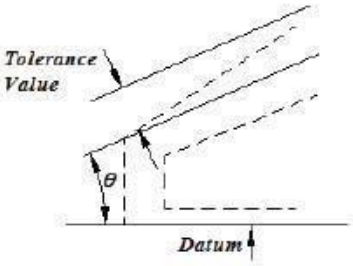

POSITIONAL TOLERANCES			
Concentricity 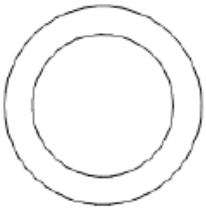	To control the deviation of the position of the position of the center or axis of the toleranced circles or cylinders.	Center or axis to lie within the circle or cylinder. Tolerance value is the diameter of such a circle or cylinder.	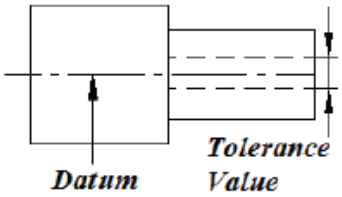

2.5 SYSTEM OF TOLERANCES

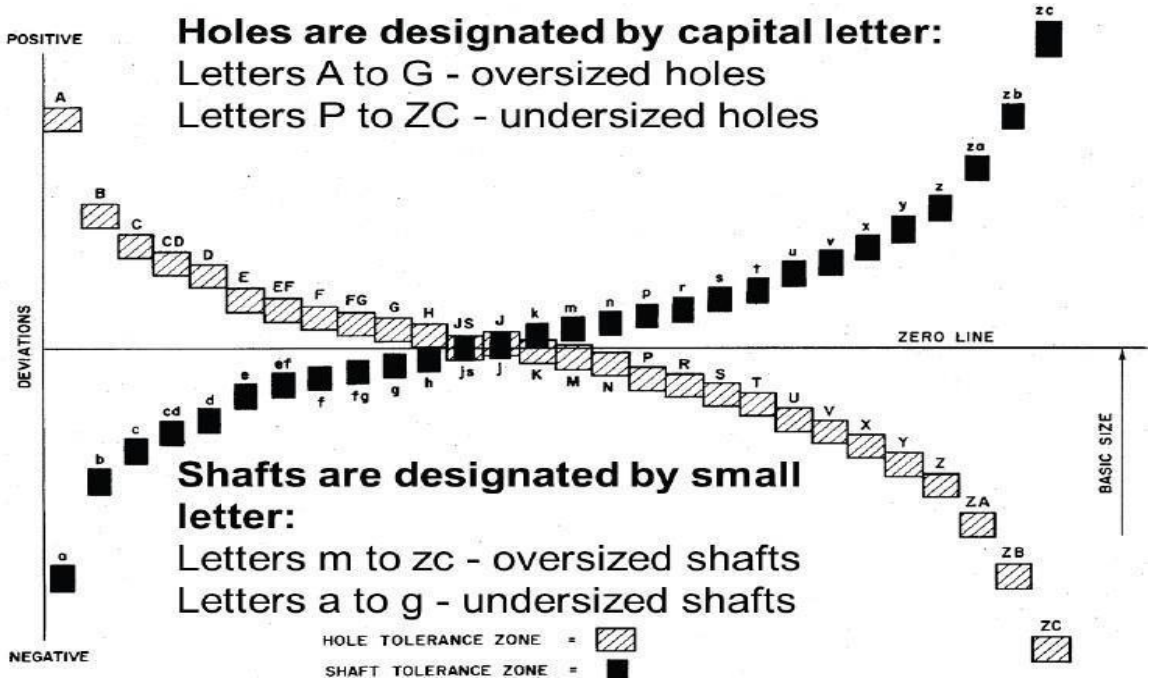

'H' is used for holes and 'h'is used for shafts whose fundamental deviation is zero.

Basic shaft: It is a shaft whose upper deviation is zero. i.e. the maximum limit of shaft coincides with the nominal size.(zero line). Eg: shaft 'h'

Basic hole: It is a hole whose lower deviation is zero. i.e. the minimum limit of hole coincides with the nominal size.(zero line). Eg: shaft 'H'

Hole Basis: In this system, the basic diameter of the hole is constant while the shaft size is varied according to the type of fit.

Significance of Hole basis system: The bureau of Indian Standards (BIS) recommends both hole basis and shaft basis systems, but their selection depends on the production methods. Generally, holes are produced by drilling, boring, reaming, broaching, etc. whereas shafts are either turned or ground.

If the shaft basis system is used to specify the limit dimensions to obtain various types of fits, number of holes of different sizes are required, which in turn requires tools of different sizes. **Hole basis system:**

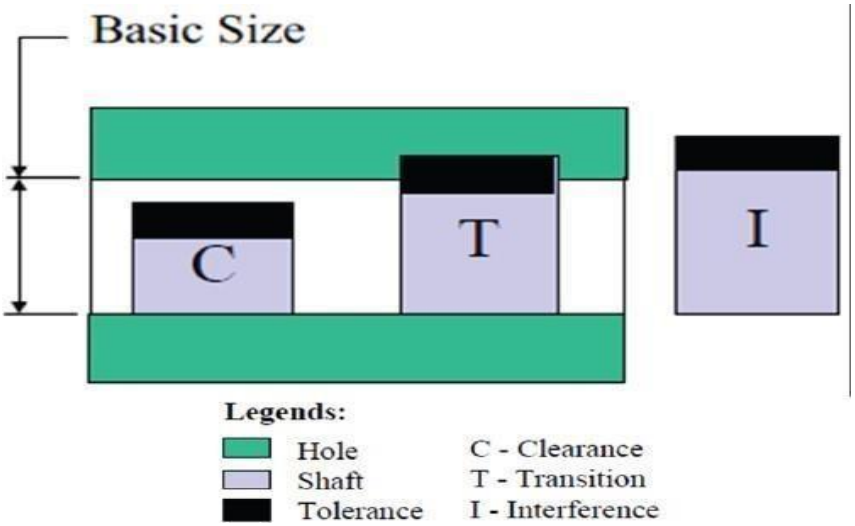

If the hole basis system is used, there will be reduction in production costs as only onetool is required to produce the ole and the shaft can be easily machined to any desiredsize. Hence hole basis system is preferred over shaft basis system.

Shaft Basis system:

In this system, the basic diameter of the shaft is constant while the hole size is varied according to the type of fit.

It may, however, be necessary to use shaft basis system where different fits are required along a long shaft.

For example, in the case of driving shafts where a single shaft may have to accommodate to a variety of accessories such as couplings, bearings, collars, etc., it is preferable to maintain a constant diameter for the permanent member, which is the shaft, and vary the bore of the accessories.

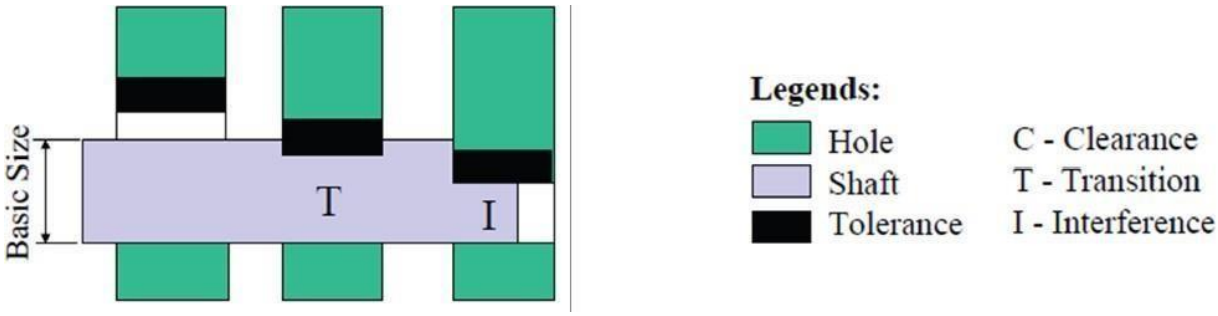

GRADES OF TOLERANCES

Grade is a measure of the magnitude of the tolerance. Lower the grade the finer the tolerance. There are total of 18 grades which are allocated the numbers IT01, IT0, IT1,IT2 T16.

Fine grades are referred to by the first few numbers. As the numbers get larger, so the tolerance zone becomes progressively wider. Selection of grade should depend on the circumstances. As the grades get finer, the cost of production increases at a sharper rate.

TOLERANCE GRADE

The tolerance grades may be numerically determined in terms of the standard tolerance unit '***i***' where ***I*** in microns is given by (for basic size up to and including 500 mm) and(for basic size above 500 mm up to and including 3150 mm), where D is in mm and it is the geometric mean of the lower and upper diameters of a particular step in which the component lies.

The above formula is empirical and is based on the fact that the tolerance varies more or less parabolic ally in terms of diameter for the same manufacturing conditions. This is so because manufacture and measurement of higher sizes are relatively difficult.

The various diameter steps specified by ISI are:1-3, 3-6, 6-10, 10-18, 18-30, 30-50, 50-80, 80-120,180-250, 250-315, 315-400, and 400-500 mm. The value of 'D' is taken as the geometric mean for a particular range of size to avoid continuous variation of tolerance with size.

The fundamental deviation of type d,e,f,g shafts are respectively $-16D^{0.44}$, $-11D^{0.41}$, $-5.5D^{0.41}$ & $-2.5D^{0.34}$

The fundamental deviation of type D,E,F,G shafts are respectively $+16D^{0.44}$, $+11D^{0.41}$,$+5.5D^{0.41}$& $+2.5D^{0.34}$.

The relative magnitude of each grade is shown in the table below;

Tol. Grade	IT 5	IT 6	IT 7	IT 8	IT 9	IT 10	IT 11	IT 12	IT 13	IT 14	IT 15	IT 16
	7i	*10i*	*16i*	*25 i*	*40 i*	*64 i*	*100 i*	*160 i*	*250 i*	*400 i*	*640 i*	*1000 i*

It may be noted that from IT 6 onwards, every 5th step is 10 times the respective grade .i.e. IT 11=10xIT6=10x10i=100 i, IT12=10xIT7=10x16i=160 i, etc.

LIMIT GAUGES

A ***Go-No GO*** gauge refers to an inspection tool used to check a work piece against its allowed tolerances. It derives its name from its use: the gauge has two tests; the check involves the work piece having to pass one test (Go) and fail the other (No Go).

It is an integral part of the quality process that is used in the manufacturing industry to ensure interchangeability of parts between processes, or even between different manufacturers.

A Go - No Go gauge is a measuring tool that does not return a size in the conventional sense, but instead returns a state. The state is either acceptable (the part is with intolerance and may be used) or it is unacceptable (and must be rejected).

They are well suited for use in the production area of the factory as they require little skill or interpretation to use effectively and have few, if any, moving parts to be damaged in the often hostile production environment.

PLAIN GAUGES

Gauges are inspection tools which serve to check the dimensions of the manufactured parts. Limit gauges ensure the size of the component lies within the specified limits. They are non-recording and do not determine the size of the part. Plain gauges are used for checking plain (Unthreaded) holes and shafts.

Plain gauges may be classified as follows;

According to their type:

(a) Standard gauges are made to the nominal size of the part to be tested and have the measuring member equal in size to the mean permissible dimension of the part to be checked. A standard gauge should mate with some snugness.

(b) Limit Gauges These are also called **'go'** and **'no go'** gauges. These are made to the limit sizes of the work to be measured. One of the sides or ends of the gauge is made to correspond to maximum and the other end to the minimum permissible size. The function of limit gauges is to determine whether the actual dimensions of the work are within or outside the specified limits.

According to their purpose:

(a) Work shop gauges: Working gauges are those used at the bench or machine in gauging the work as it being made.

(b) Inspection gauges: These gauges are used by the inspection personnel to inspect manufactured parts when finished.

(c) Reference or Master Gauges: These are used only for checking the size or condition of other gauges.

According to the form of tested surface:

Plug gauges: They check the dimensions of a hole

Snap & Ring gauges: They check the dimensions of a shaft.

According to their design:

Single limit & double limit gauges

Single ended and double ended gauges

Fixed & adjustable gauges

LIMIT GAUGING

Limit gauging is adopted for checking parts produced by mass production. It has the advantage that they can be used by unskilled persons.

Instead of measuring actual dimensions, the conformance of product with tolerance specifications can be checked by a 'GO' and 'NO GO' gauges.

A 'GO' gauge represents the maximum material condition of the product (i.e. minimum hole size or maximum shaft size) and conversely a 'NO GO' represents the minimum material condition (i.e. maximum hole size or minimum shaft size).

Plug gauges:

Plug gauges are the limit gauges used for checking holes and consist of two cylindrical wear resistant plugs. The plug made to the lower limit of the hole is known as 'GO' end and this will enter any hole which is not smaller than the lower limit allowed. The plug made to the upper limit of the hole is known as 'NO GO' end and this will not enter any hole which is smaller than the upper limit allowed. The plugs are arranged on either ends of a common handle.

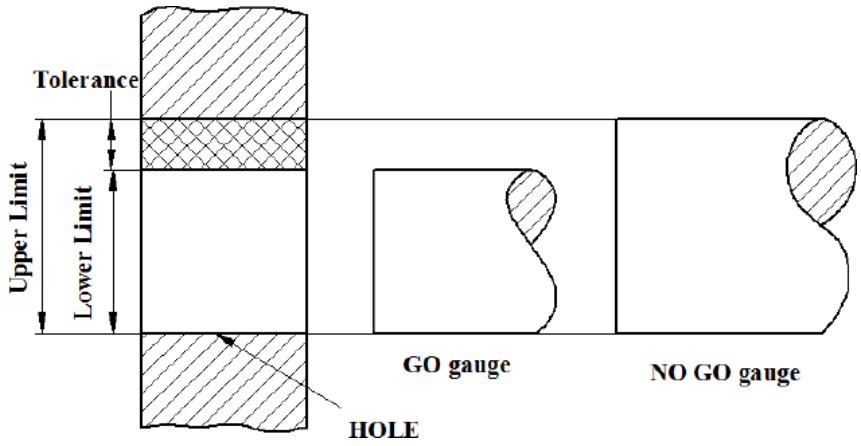

Plug gauges are normally double ended for sizes up to 63 mm and for sizes above 63 mm they are single ended type.

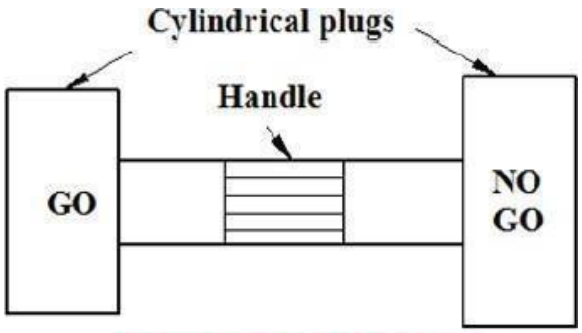

Double ended Plug Gauge

The handles of heavy plug gauges are made of light metal alloys while the handles of small plug gauges can be made of some nonmetallic materials.

Progressive plug gauges:

For smaller through holes, both GO & NO GO gauges are on the same side separated by a small distance. After the full length of GO portion enters the hole, further entry is obstructed by the NO GO portion if the hole is within the tolerance limits.

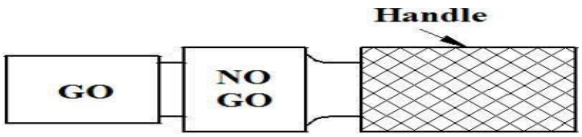

Progressive Plug Gauge

Ring gauges:

Ring gauges are used for gauging shafts. They are used in a similar manner to that of GO & NO GO plug gauges. A ring gauge consists of a piece of metal in which a hole of required size is bored.

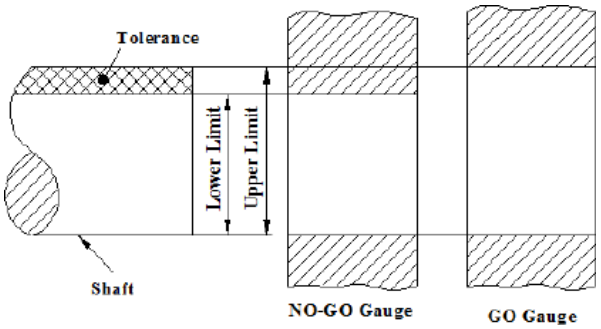

SNAP (or) GAP GAUGES:

A snap gauge usually consists of a plate or frame with a parallel faced gap of the required dimension. Snap gauges can be used for both cylindrical as well as non cylindrical work as compared to ring gauges which are conveniently used only for cylindrical work.

Double ended snap gauges can be used for sizes ranging from 3 to 100 mm.For sizes above 100 mm up to 250 mm a single ended progressive gauge may be used.

Desirable properties of Gauge Materials:

The essential considerations in the selection of material of gauges are;

1 Hardness to resist wear.

2 Stability to preserve size and shape

3 Corrosion resistances

4 Merchantability for obtaining the required degree of accuracy.

5 Low coefficient of friction of expansion to avoid temperature effects.

Materials used for gauges:

High carbon steel: Heat treated Cast steel (0.8-1% carbon) is commonly used for most gauges.

Mild Steel: Case hardened on the working surface. It is stable and easily machinable.

Case hardened steel: Used for small & medium sized gauges.

Chromium plated & Hard alloys: Chromium plating imparts hardness, resistance to abrasion & corrosion. Hard alloys of tungsten carbide may also be used.

Cast Iron: Used for bodies of frames of large gauges whose working surfaces are hard inserts of tool steel or cemented carbides?

Glass: They are free from corrosive effects due to perspiration from hands. Also they are not affected by temperature changes.

Invar: It is a nickel-iron alloy (36% nickel) which has low coefficient of expansion but not suitable for usage over long periods.

(The name, Invar, comes from the word invariable, referring to its lack of expansion or contraction with temperature changes. It was invented in 1896 by Swiss scientist Charles Eduard
Guillaume. He received the Nobel Prize in Physics in 1920 for this discovery, which enabled improvements in scientific instruments).

Taylor's Principle of Gauge Design:

According to Taylor, 'Go' and 'No Go' gauges should be designed to check maximum and minimum material limits which are checked as below;

'GO' Limit. This designation is applied to that limit of the two limits of size which corresponds to the maximum material limit considerations, i.e. upper limit of a shaft and lower limit of a hole.

The GO gauges should be of full form, i.e. they should check shape as well as size.

'No Go' Limit:

This designation is applied to that limit of the two limits of size which corresponds to the minimum material condition. i.e. the lower limit of a shaft and the upper limit of a hole.

'No Go' gauge should check only one part or feature of the component at a time, so that specific discrepancies in shape or size can be detected. Thus a separate 'No Go' gauge is required for each different individual dimension.

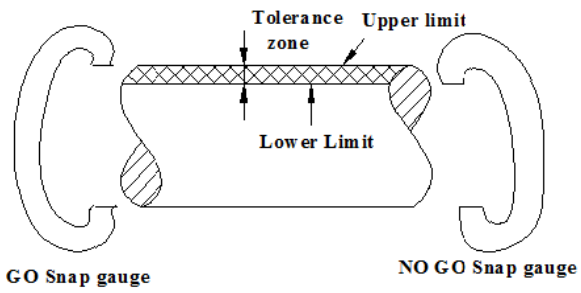

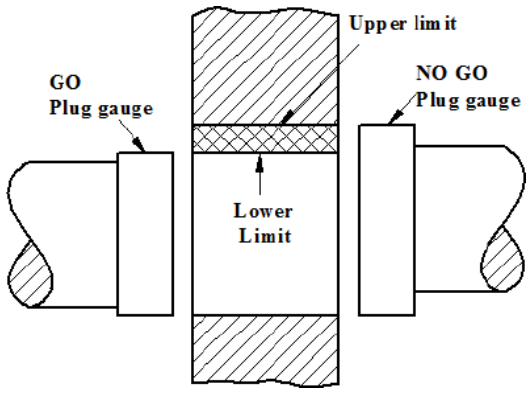

Gauge Tolerance:

Gauges, like any other jobs require a manufacturing tolerance due to reasonable imperfections in the workmanship of the gauge maker. The gauge tolerance should be kept as minimum as possible though high costs are involved to do so. The tolerance on the GO & NO GO gauges is usually 10% of the work tolerance.

Wear Allowance:

The GO gauges only are subjected to wear due to rubbing against the parts during inspection and hence a provision has to be made for the wear allowance. Wear allowances taken as 10% of gauge tolerance and is allowed between the tolerance zone of the gauge and the maximum material condition. *(i.e.* lower limit of a hole & upper limit of a shaft). If the work tolerance is less than 0.09 mm, wear allowance need not be given unless otherwise stated.

Present British System of Gauge & Wear Tolerance:

PLUG GAUGES: (For checking tolerances on holes)

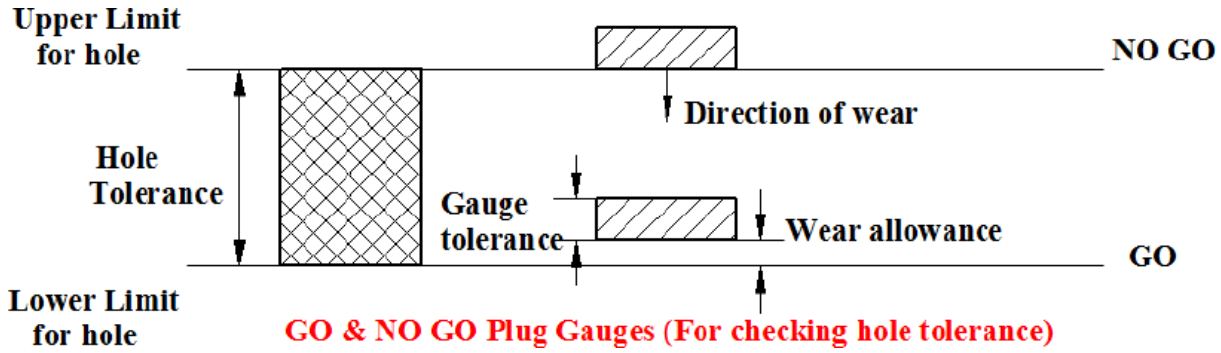

GO & NO GO Plug Gauges (For checking hole tolerance)

RING/SNAP GAUGES: (For checking tolerances on shafts)

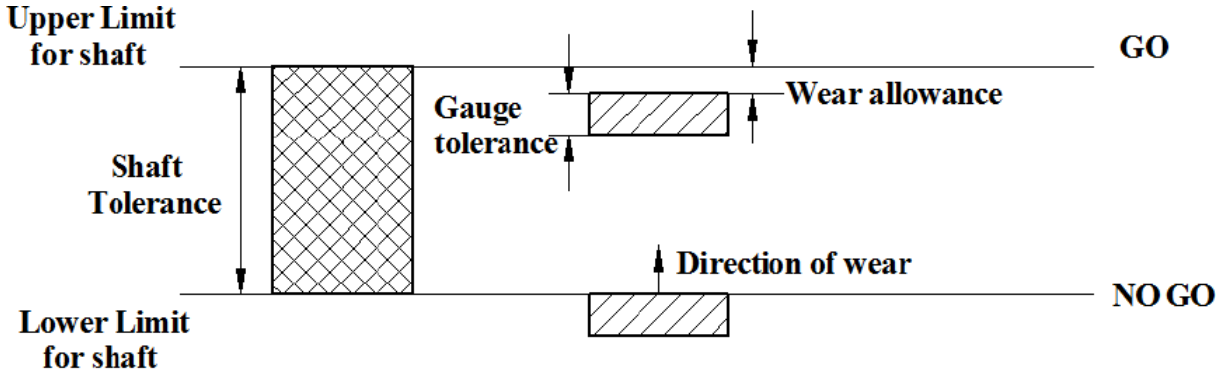

GO & NO GO Ring Gauges (For checking shaft tolerance)

Numerical Problem 1:

Calculate the dimensions of plug & ring gauges to control the production of 50 mm shaft & hole

pair of H_7d_8 as per IS specifications. The following assumptions may be made: 50 mm lies in diameter step of 30-50 mm. Upper deviation for 'd' shaft is $-16D^{0.44}$ and lower deviation for hole

H is zero. Tolerance unit in 'i' in microns is $=0.45\sqrt[3]{D}+0.001D$ and IT6=10i and above IT6 grade, the tolerance is multiplied by 10 at each 5th step.

COMPARATORS

Comparators can give precision measurements, with consistent accuracy by eliminating human error. They are employed to find out, by how much the dimensions of the given component differ from that of a known datum. If the indicated difference is small, a suitable magnification device is selected to obtain the desired accuracy of measurements. It is an indirect type of instrument and used for linear measurement. If the dimension is less or greater, than the standard, then the difference will be shown on the dial. It gives only the difference between actual and standard dimension of the work piece. To check the height of the job H2 ,with the standard job of height H_1

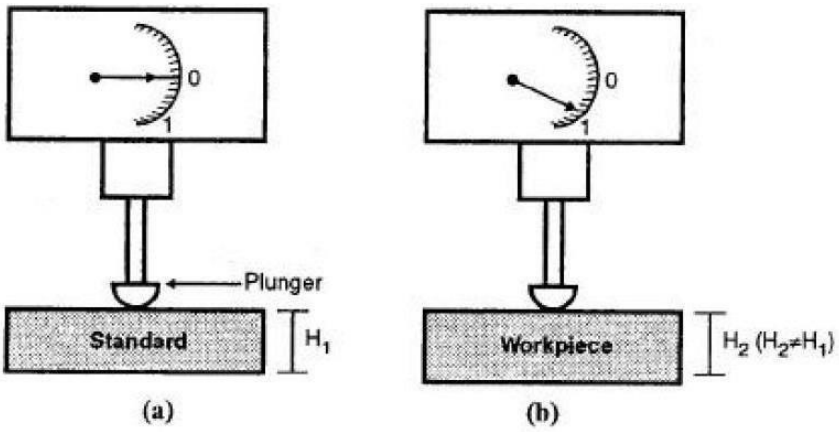

Initially, the comparator is adjusted to zero on its dial with a standard job in positions shown in Figure(a). The reading H1is taken with the help of a plunger. Then the standard job is replaced by the work-piece to be checked and the reading H2 is taken. If H1and H2 are different, then the change i~ the dimension will be shown on the dial of the comparator. Thus difference is then magnified 1000 to 3000 X to get the clear variation in the standard and actual job.

In short, Comparator is a device which

(1) Picks up small variations in dimensions.

(2) Magnifies it.

(3) Displays it by using indicating devices, by which comparison can be made with some standard value.

Characteristics or Basic requirements of comparators

1) The instrument must be of robust design and construction so as to withstand the effect of ordinary usage without impairing its measuring accuracy.
2) The including devices must be such that readings are obtained in least possible time. The system should be free from backlash, wear effects and the inertia should be minimum.
3) Provision for maximum compensation to temperature effects.
4) The scale must be linear and must have straight line characteristics.
5) The instrument must be versatile i.e., its design must be such that it can be used for a wide range of measurements.
6) The measuring pressure should be low and constant.
7) The indicator (pointer, liquid column etc) should be clear and free from oscillations.

2.5.1 Classification of comparators:

1. Mechanical Comparator: It works on gears pinions, linkages, levers, springs etc.

2. Pneumatic Comparator: Pneumatic comparator works by using high pressure air, valves, back pressure etc.

3. Optical Comparator: Optical comparator works by using lens, mirrors, light source etc.

4. Electrical Comparator: Works by using step up, step down transformers.

5. Electronic Comparator: It works by using amplifier, digital signal etc.

6. Combined Comparator: The combination of any two of the above types can give the best result.

Characteristics of Good Comparators:

1. It should be compact.
2. It should be easy to handle.
3. It should give quick response or quick result.
4. It should be reliable, while in use.
5. There should be no effects of environment on the comparator.
6. Its weight must be less.
7. It must be cheaper.
8. It must be easily available in the market.
9. It should be sensitive as per the requirement.
10. The design should be robust.
11. It should be linear in scale so that it is easy to read and get uniform response.
12. It should have less maintenance.
13. It should have hard contact point, with long life.

2.5.2 Mechanical Comparator:

It is self controlled and no power or any other form of energy is required. It employs mechanical means for magnifying the small movement of the measuring stylus. The movement is due to the difference between the standard and the actual dimension being checked

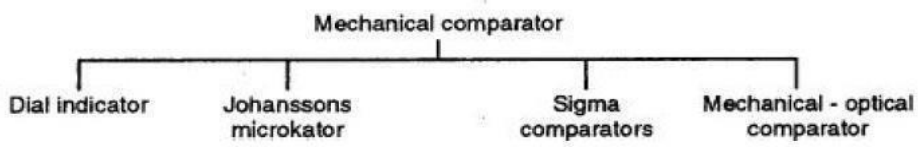

The method for magnifying the small stylus movement in all the mechanical comparators is by means of levers, gear trains or combination of these. They are available of different make and each has it's own characteristic. The various types of mechanical comparators are dial indicator, rack and pinion, sigma comparator, Johansson mikrokator.

a. Dial Indicator:

It operates on the principle, that a very slight upward pressure on the spindle at the contact point is multiplied through a system of gears and levers. It is indicated on the face of the dial by a dial finger. Dial indicators basically consists of a body with a round graduated dial and a contact point connected with a spiral or gear train so that hand on the dial face indicates the amount of movement of the contact point. They are designed for use on a

wide range of standard measuring devices such as dial box gauges, portal dial, hand gauges, dial depth gauges, diameter gauges and dial indicator snap gauge.

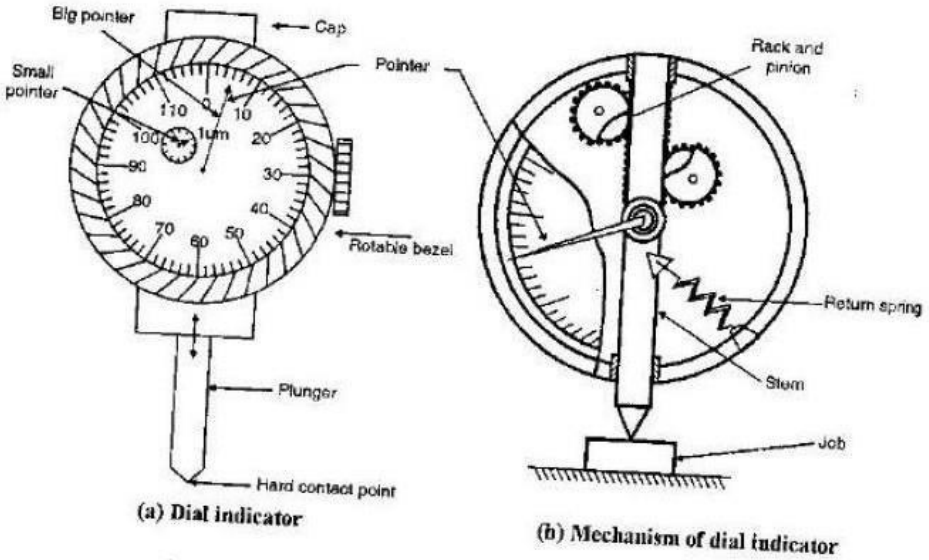

(a) Dial indicator (b) Mechanism of dial indicator

Corresponds to a spindle movement of 1 mm. The movement mechanism of the instrument is housed in a metal case for it's protection. The large dial scale is graduated into100 divisions. The indicator is set to zero by the use of slip gauges representing the basic size of part.

Requirements of Good Dial Indicator:

1. It should give trouble free and dependable readings over a long period.
2. The pressure required on measuring head to obtain zero reading must remain constant over the whole range.
3. The pointer should indicate the direction of movement of the measuring plunger.
4. The accuracy of the readings should be within close limits of the various sizes andranges
5. The movement of the measuring plunger should be in either direction without affecting the accuracy.
6. The pointer movement should be damped, so that it will not oscillate when the readings are being taken.

Applications:

1. Comparing two heights or distances between narrow limits.
2. To determine the errors in geometrical form such as ovality, roundness and taper.
3. For taking accurate measurement of deformation such as intension and compression.
4. To determine positional errors of surfaces such as parallelism, sureness and alignment.
5. To check the alignment of lathe centers by using suitable accurate bar between the centers.

6. To check trueness of milling machine arbors and to check the parallelism of shaper arm with table surface or vice.

b) Johansson Mikrokator :

This comparator was developed by C.F. Johansson.

Principle:

It works on the principle of a Button spring, spinning on a loop of string like in the case of Children's toys.

Construction:

The method of mechanical magnification is shown in Figure. It employs a twisted metal strip. Any pull on the strip causes the centre of the strip to rotate. A very light pointer made of glass tube is attached to the centre of the twisted metal strip. The measuring plungers on the slit washer and transmits its motion through the bell crank lever to the twisted metal strip. The other end of the twisted metal strip is fastened to the cantilever strip. The overhanging length of the cantilever strip can be varied to adjust the magnification of the instrument. The longer the length of the cantilever, the more it will deflect under the pull of the twisted metal strip and less rotation of the pointer is obtained.

When the plunger moves by a small distance in upward direction the bell crank lever turns to the right hand side. This exerts a force on the twisted strip and it causes a change in its length by making it further twist or untwist. Hence the pointer at the centre rotates by some amount. Magnification up to 5000X can be obtained by this comparator

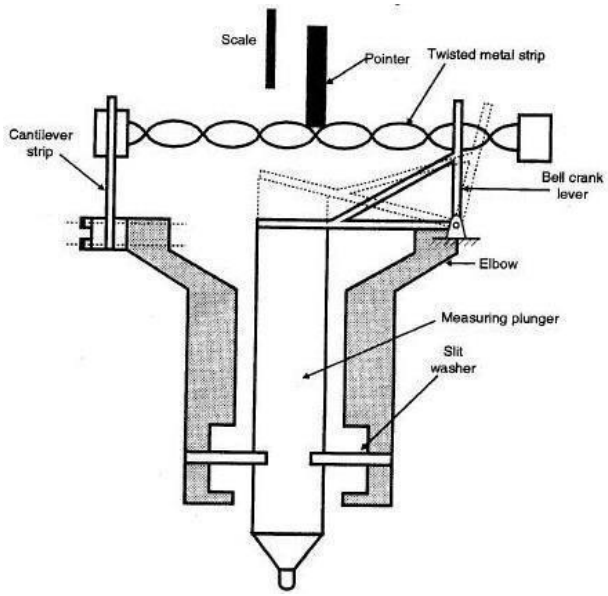

Advantages of Mechanical Comparator:

1. They do not require any external source of energy.
2. These are cheaper and portable.

3. These are of robust construction and compact design.

4. The simple linear scales are easy to read.

5. These are unaffected by variations due to external source of energy such air, electricityetc.

Disadvantages:

1. Range is limited as the pointer moves over a fixed scale.

2. Pointer scale system used can cause parallax error.

3. There are number of moving parts which create problems due to friction, and ultimatelythe accuracy is less.

4. The instrument may become sensitive to vibration due to high inertia.

c) Mechanical - Optical Comparator:

Principle:

In mechanical optical comparator, small variation in the plunger movement is magnified: first by mechanical system and then by optical system.

Construction:

The movement of the plunger is magnified by the mechanical system using a pivoted lever. From the Figure the mechanical magnification = x2 / x1. High optical magnification is Mechanical Measurements and Metrology possible with a small movement of the mirror. The important factor is that the mirror used is of front reflection type only.

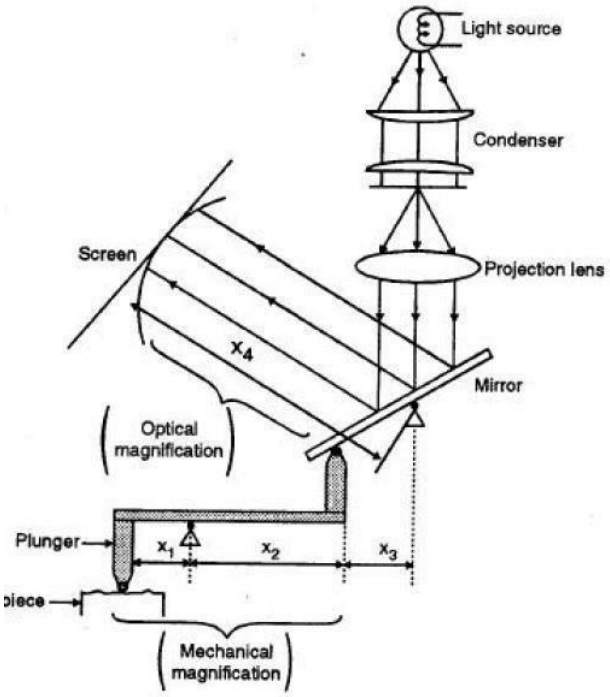

The back reflection type mirror will give two reflected images as shown in Figure,hence the exact reflected image cannot be identified.

Advantages:

1. These Comparators are almost weightless and have less number of moving parts, due tothis there is less wear and hence lessfriction.70

2. Higher range even at high magnification is possible as the scale moves past the index.

3. The scale can be made to move past a datum line and without having any parallax errors.

4. They are used to magnify parts of very small size and of complex configuration such as intricate grooves, radii or steps.

Disadvantages:

1. The accuracy of measurement is limited to 0.001 mm

2. They have their own built in illuminating device which tends to heat the instrument.

3. Electrical supply is required.

4. Eyepiece type instrument may cause strain on the operator.

5. Projection type instruments occupy large space and they are expensive.

6. When the scale is projected on a screen, then it is essential to take the instrument to a darkroom in order to take the readings easily.

d) Sigma Comparator:

The plunger is attached to a bar which is supported between the bending plates at the top and bottom portion

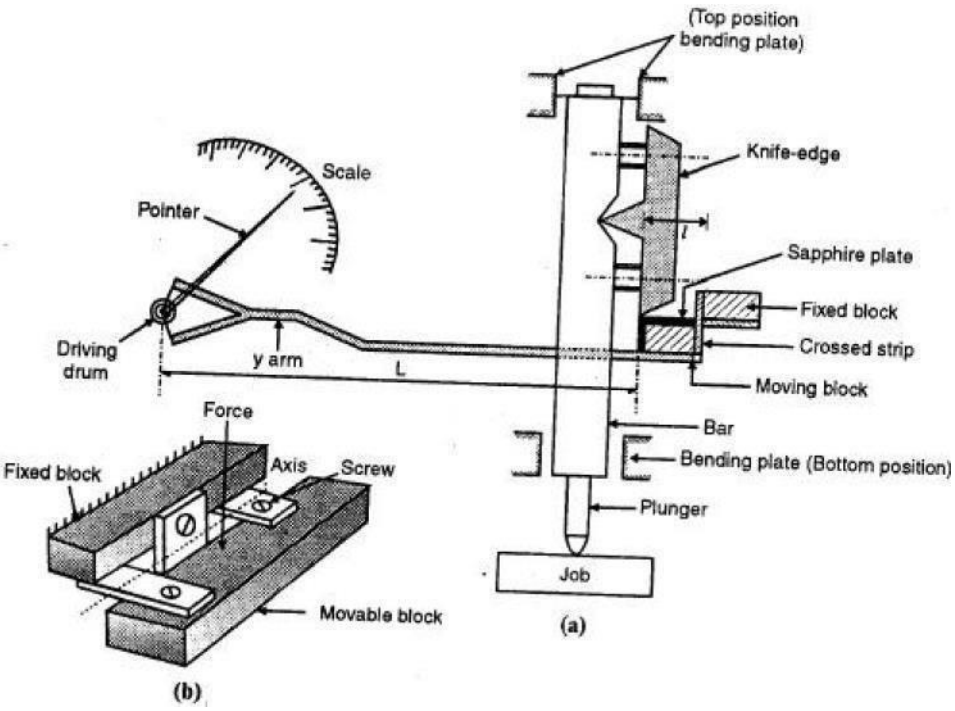

The bar is restricted to move in the vertical direction. A knife edge is fixed to the bar.

The knife edge is attached to the sapphire plate which is attached to the moving block. The knife edge extorts a force on the moving block through sapphire plate. Moving block is attached to the fixed block with the help of crossed strips as shown in Figure (b). When the force is applied on the moving block, it will give an angular deflection. A Y-arm which is attached to the moving block transmits the rotary motion to the driving drum of radius r. This deflects the pointer and then the reading is noted.

If l = Distance from hinge pivot to the knife edge

L = Length of y-arm

R = Driving drum radius

D Length of the pointer

Then the total magnification = (L/l) *(D/R)

2.5.3 Electrical Comparators

Electrical comparators give a wide range of advantages. As we know, components like levers, gears, racks and pinions, activate mechanical devices. The accuracy and life ofthe instruments are affected as they are subjected to wear and friction.

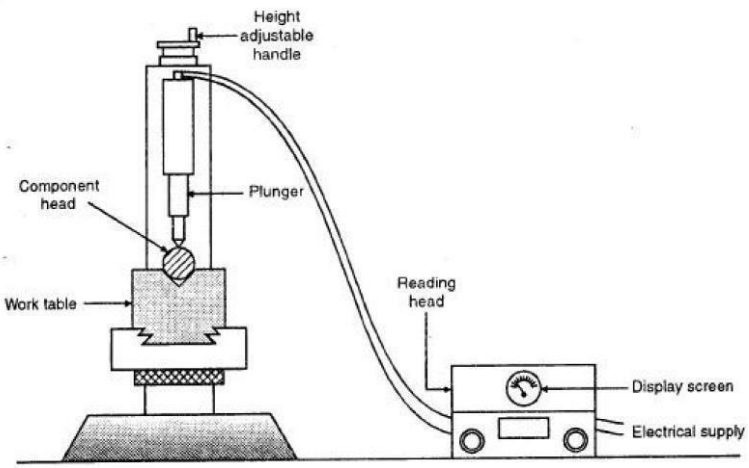

Electrical comparators have no moving parts. Thus a high degree of reliability is expected from these instruments. Generally there are two important applications of electrical comparators:

1. Used as measuring heads

2. Used for electrical gauging heads, to provide usual indication to check the dimensions within the limits laid down.

The first application is very important when there is a requirement for precise measurement for e.g. Checking or comparison of workshop slip gauges against inspection slip gauges. The second application is used to indicate with a green light if a dimension is within

the limits. A red lamp indicates an undersized dimension; a yellow lamp indicates an oversize dimension. So the operator is not required to be aware of the actual tolerances on the dimension. After setting the instrument correctly, all that needs to be done is to place the component under the plunger of the gauging head. The signal lamps provide in standard positive indication of the acceptability of the dimension under test.

Advantages:

1. Measuring units can be remote from indicating units.
2. Variable sensitivity which can be adjusted as per requirement.
3. No moving parts, hence it can retain accuracy over long periods.
4. Higher magnification is possible as compared to mechanical comparator.

Disadvantages:

1. The accuracy of working of these comparators is likely to be affecting due to temperature and humidity.
2. It is not a self contained unit; it needs stabilized power supply for its operation.
3. Heating of coils can cause zero drifts and it may alter calibration.
4. It is more expensive than mechanical comparator.

2.5.4 Pneumatic Comparators (Solex Gauge):

Principle:

It works on the principle of pressure difference generated by the air flow. Air is supplied at constant pressure through the orifice and the air escapes in the form of jets through a restricted space which exerts a back pressure. The variation in the back pressure is then used to find the dimensions of a component.

Working:

The air is compressed in the compressor at high pressure which is equal to Water head H. The excess air escapes in the form of bubbles. Then the metric amount of air is passed through the orifice at the constant pressure. Due to restricted area, atA1 position, the back pressure is generated by the head of water displaced in the manometer tube. To determine the roundness of the job, the job is rotated along the jet axis, if no variation in the pressure reading is obtained then we can say that the job is perfectly circular at position A1.

Then the same procedure is repeated at various positions A2, A3, A4, position and variation in the pressure reading is found out. Also the diameter is measured at position A1corresponding to the portion against two jets and diameter is also measured at various position along the length of the bore.

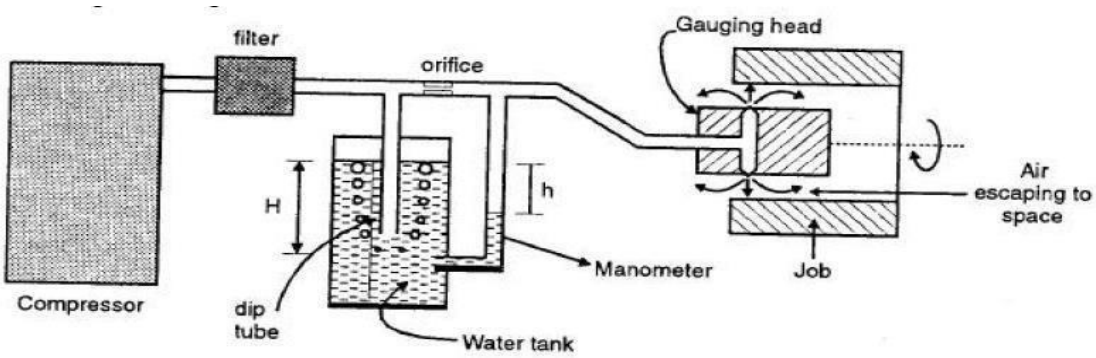

Any variation in the dimension changes the value of h, e.g. Change in dimension of0.002 mm changes the value of h from 3 to 20 mm. Moderate and constant supply pressure is required to have the high sensitivity of the instrument.

Advantages:

1. It is cheaper, simple to operate and the cost is low.
2. It is free from mechanical hysteresis and wear.
3. The magnification can be obtained as high as 10,000 X.
4. The gauging member is not in direct contact with the work.
5. Indicating and measuring is done at two different places.
6. Tapers and ovality can be easily detected.
7. The method is self cleaning due to continuous flow of air through the jets and this makes the method ideal to be used on shop floor for online controls.

Disadvantages:

1. They are very sensitive to temperature and humidity changes.
2. The accuracy may be influenced by the surface roughness of the component being checked.
3. Different gauging heads are needed for different jobs.
4. Auxiliary equipments such as air filters, pressure gauges and regulators are needed.
5. Non-uniformity of scale is a peculiar aspect of air gauging as the variation of backpressure is linear, over only a small range of the orifice size variation.

Unit-2

Flatness And Surface Roughness Measurement

UNIT II

LINEAR MEASUREMENT AND ANGULAR MEASUREMENTS

1.1 Definition of Standards

A standard is defined as "something that is set up and established by an authority as rule of the measure of quantity, weight, extent, value or quality".

For example: a meter is a standard established by an international organization for measurement of length. Industry, commerce, international trade in modern civilization would be impossible without a good system of standards.

Role of Standards

The role of standards is to achieve uniform, consistent and repeatable measurements throughout the world. Today our entire industrial economy is based on the interchangeability of parts the method of manufacture. To achieve this, a measuring system adequate to define the features to the accuracy required & the standards of sufficient accuracy to support the measuring system are necessary.

STANDARDS OF LENGTH

In practice, the accurate measurement must be made by comparison with a standard of known dimension and such a standard is called "Primary Standard". The first accurate standard was made in England and was known as "Imperial Standard yard" which was followed by International Prototype meter" made in France. Since these two standards of length were made of metal alloys they are called 'material length standards'.

International Prototype meter

It is defined as the straight line distance, at 0°C, between the engraved lines of pure platinum-iridium alloy (90% platinum & 10% iridium) of 1020 mm total length and having a 'tresca' cross section as shown in fig. The graduations are on the upper surface of the web which coincides with the neutral axis of the section.

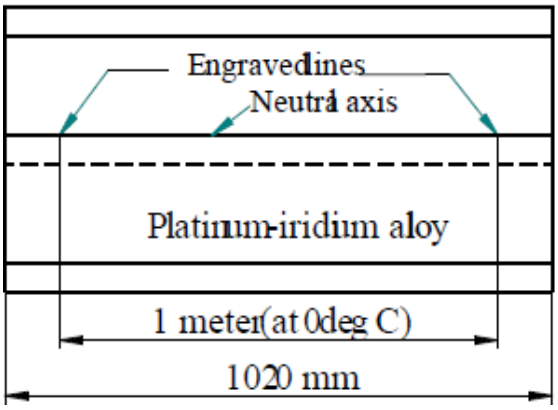

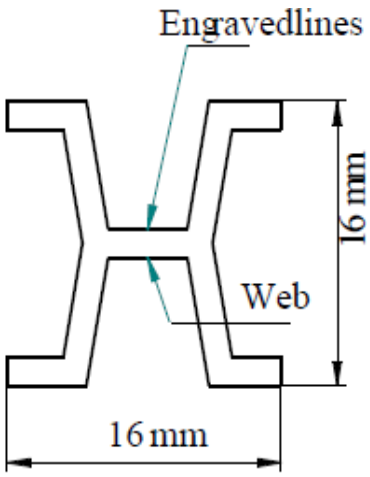

The tresca cross section gives greater rigidity for the amount of material involved and is therefore economic in the use of an expensive metal. The platinum-iridium alloy is used because it is non oxidizable and retains good polished surface required for engraving good quality lines.

Imperial Standard yard

An imperial standard yard, shown in fig, is a bronze (82% Cu, 13% tin, 5% Zinc) bar of 1 inch square section and 38 inches long. A round recess, 1 inch away from the two ends is cut at both ends upto the central or 'neutral plane' of the bar.

Further, a small round recess of (1/10) inch in diameter is made below the center. Two gold plugs of (1/10) inch diameter having engravings are inserted into these holes so that the lines (engravings) are in neutral plane.

Yard is defined as the distance between the two central transverse lines of the gold plug
at 620F.

The purpose of keeping the gold plugs in line with the neutral axis is to ensure that the neutral axis remains unaffected due to bending, and to protect the gold plugs from accidental damage.

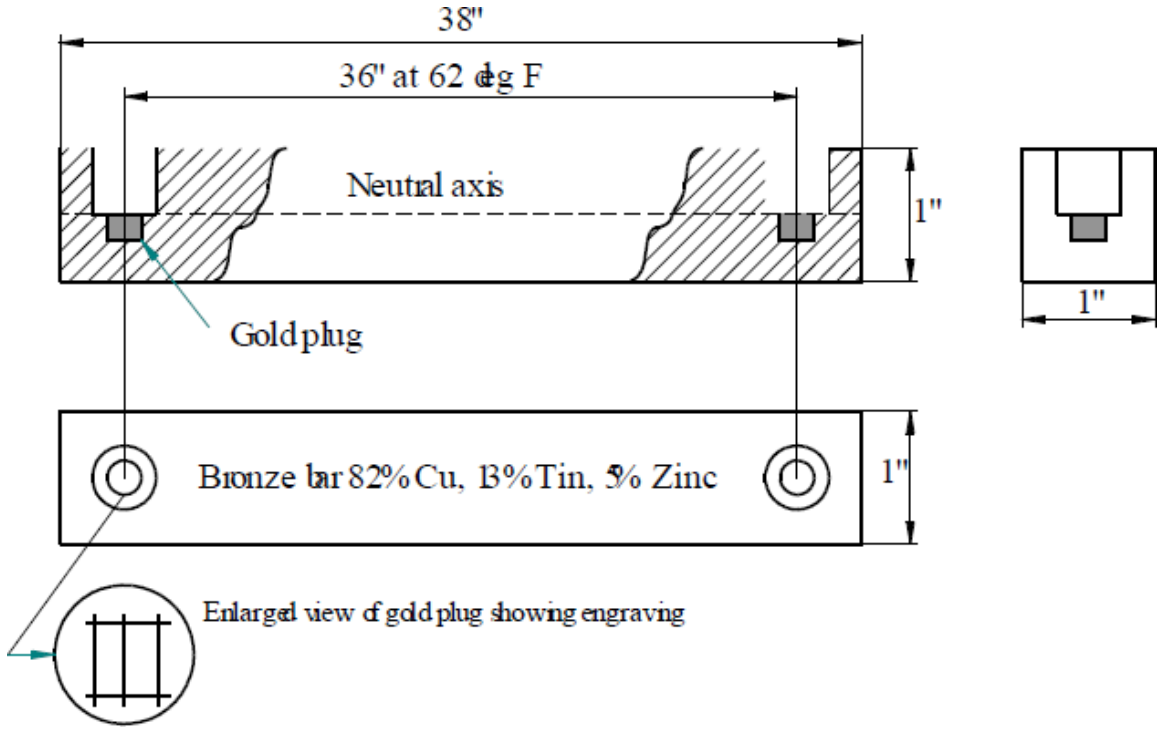

Bronze Yard was the official standard of length for the United States between 1855 and 1892, when the US went to metric standards. 1 yard = 0.9144 meter. The yard is used as the standard unit of field-length measurement in American, Canadian and Association football, cricket pitch dimensions, swimming pools, and in some countries, golf fairway measurements.

Disadvantages of Material length standards

1. Material length standards vary in length over the years owing to molecular changes in the alloy.
2. The exact replicas of material length standards were not available for use somewhere else.
3. If these standards are accidentally damaged or destroyed then exact copies could not be made.
4. Conversion factors have to be used for changing over to metric system.

Light (Optical) wave Length Standard

Because of the problems of variation in length of material length standards, the possibility of using light as a basic unit to define primary standard has been considered. The wavelength of a selected radiation of light and is used as the basic unit of length. Since the wavelength is not a physical one, it need not be preserved & can be easily reproducible without considerable error.

A krypton-filled discharge tube in the shape of the element's atomic symbol. A colorless, odorless, tasteless noble gas, krypton occurs in trace amounts in the atmosphere, is isolated by fractionally distilling liquefied air. The high power and relative ease of operation of krypton discharge tubes caused (from 1960 to 1983) the official meter to be defined in terms of one orange-red spectral line of krypton-86.

Advantages of using wave length standards

1. Length does not change.
2. It can be easily reproduced easily if destroyed.
3. This primary unit is easily accessible to any physical laboratories.
4. It can be used for making measurements with much higher accuracy than material standards.
5. Wavelength standard can be reproduced consistently at any time and at any place.

1.2 Subdivision of standards

The imperial standard yard and the international prototype meter are master standards & cannot be used for ordinary purposes. Thus based upon the accuracy required, the standards are subdivided into four grades namely;

1. Primary Standards
2. Secondary standards
3. Teritiarystandards
4. Working standards

Primary standards

They are material standard preserved under most careful conditions. These are not used for directly for measurements but are used once in 10 or 20 years for calibrating secondary standards. **Ex:** International Prototype meter, Imperial Standard yard.

Secondary standards

These are close copies of primary standards w.r.t design, material & length. Any error existing in these standards is recorded by comparison with primary standards after long intervals. They are kept at a number of places under great supervision and serve as reference for tertiary standards. This also acts as safeguard against the loss or destruction of primary standards.

Teritiary standards

The primary or secondary standards exist as the ultimate controls for reference at rare intervals. Tertiary standards are the reference standards employed by National Physical laboratory (N.P.L) and are the first standards to be used for reference in laboratories & workshops. They are made as close copies of secondary standards & are kept as reference for comparison with working standards.

Working standards

These standards are similar in design to primary, secondary & tertiary standards. But being less in cost and are made of low grade materials, they are used for general applications in metrology laboratories.

Sometimes, standards are also classified as;

- Reference standards (used as reference purposes)
- Calibration standards (used for calibration of inspection & working standards)
- Inspection standards (used by inspectors)
- Working standards (used by operators)

1.3 LINE STANDARDS

When the length being measured is expressed as the distance between two lines, then it is called "Line Standard".

Examples: Measuring scales, Imperial standard yard, International prototype meter, etc.

Characteristics of Line Standards

1. Scales can be accurately engraved but it is difficult to take the full advantage of this accuracy. ***Ex:*** A steel rule can be read to about ± 0.2 mm of true dimension.
2. A scale is quick and easy to use over a wide range of measurements.
3. The wear on the leading ends results in ***'under sizing'***
4. A scale does not possess a 'built in' datum which would allow easy scale alignment with the axis of measurement, this again results in 'under sizing'.

5. Scales are subjected to parallax effect, which is a source of both positive & negative reading errors

6. Scales are not convenient for close tolerance length measurements except in conjunction with microscopes.

END STANDARDS

When the length being measured is expressed as the distance between two parallel faces, then it is called ***'End standard'.*** End standards can be made to a very high degree of accuracy.

Ex: Slip gauges, Gap gauges, Ends of micrometer anvils, etc.

Characteristics of End Standards

1. End standards are highly accurate and are well suited for measurements of close tolerances as small as 0.0005 mm.
2. They are time consuming in use and prove only one dimension at a time.
3. End standards are subjected to wear on their measuring faces.
4. End standards have a 'built in' datum, because their measuring faces are flat & parallel and can be positively located on a datum surface.
5. They are not subjected to the parallax effect since their use depends on ***"feel".***
6. Groups of blocks may be ***"wrung"*** together to build up any length. But faulty wringing leads to damage.
7. The accuracy of both end & line standards are affected by temperaturechange.

1.4 CALIBRATION OF END BARS

The actual lengths of end bars can be found by wringing them together and comparing them with a calibrated standard using a level comparator and also individually comparing among them. This helps to set up a system of linear equations which can be solved to find the actual lengths of individual bars. The procedure is clearly explained in the forthcoming numerical problems.

2.1 Vernier Instruments

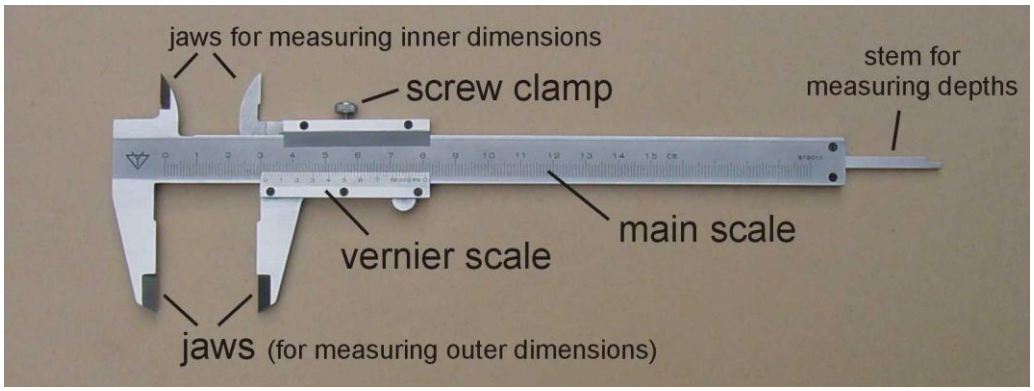

Figure 2.1 Vernier Instrument

- The principle of vernier is that when two scales or divisions slightly different in size are used, the difference between them can be utilized to enhance the accuracy of measurement.
- The vernier caliper essentially consists of two steel rules and these can slide along each other. One of the scales, i.e., main scale is engraved on a solid L-shaped frame. On this scale cm graduations are divided into 20 parts so that one small division equals 0.05 cm. One end of the frame contains a fixed jaw which is shaped into a contact tip at its extremity.
- The three elements of vernier caliper, viz, beam, fixed jaw, and sliding jaw permit substantial improvements in the commonly used measuring techniques over direct measurement with line graduated rules.
- The alignment of the distance boundaries with the corresponding graduations of the rule is ensured by means of the positive contact members (the jaws of the caliper gauges).
- The datum of the measurement can be made to coincide precisely with one of the boundaries of the distance to be measured.
- The movable jaw achieves positive contact with the object boundary at the opposite end of the distance to be measured. The closely observable correspondence of the reference marks on the slide with a particular scale value significantly reduces the extent of read- out alignment errors.

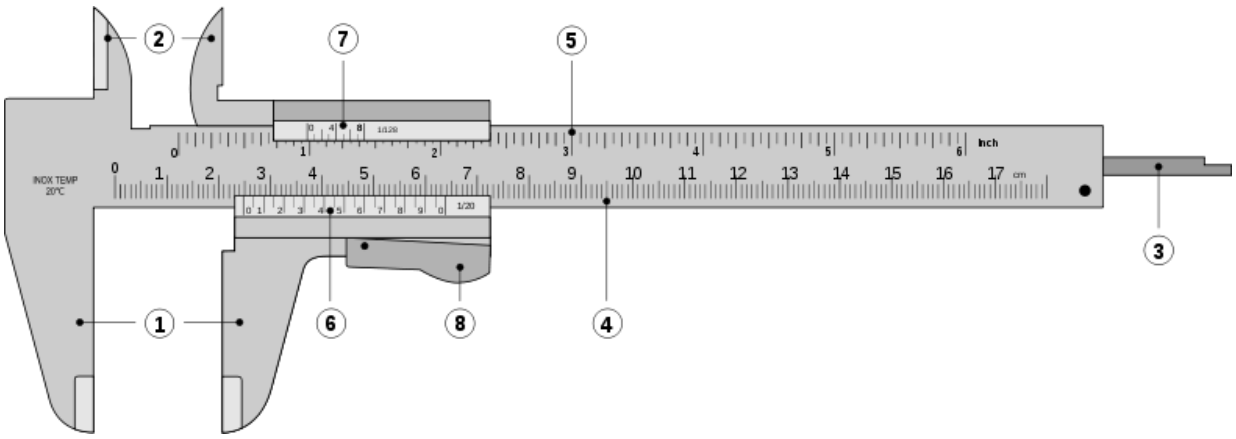

Figure 2.2 Vernier Instruments

- A sliding jaw which moves along the guiding surface provided by the main scale is coupled to a vernier scale. The sliding jaw at its left extremity contains another

measuring tip.

- When two measuring tip surfaces are in contact with each other, scale shows zero reading. Thefineradjustmentofthemovablejawcan bedonebytheadjustingscrew
- First the whole movable jaw assembly is adjusted so that the two measuring tips just touch the part to be measured. Then lock nut B is tightened. Final adjustment depending upon the sense of correct feel is made by the adjusting screw.
- The movement of adjusting screw makes the part containing locking nut A and sliding jaw to move, as the adjusting screw rotates on a screw which is in a way fixed to the movablejaw. After final adjustmenthasbeenmade, thelockingnut A is also tightened and the reading is noted down
- . Themeasuringtipsaresodesigned as tomeasureinside as well as outsidedimensions.

1. Outside jaws: used to measure external diameter or width of an object
2. Inside jaws: used to measure internal diameter of an object
3. Depth probe: used to measure depths of an object or a hole
4. Main scale: gives measurements of up to one decimal place (in cm).
5. Main scale: gives measurements in fraction (in inch)
6. Vernier gives measurements up to two decimal places (in cm)
7. Vernier gives measurements in fraction (in inch)
8. Retainer: used toblockmovablepart to allowthe easytransferring a measurement

2.2 Reading the VernierScale

- For understanding the working of vernier scale let us assume that each small division of the main scale is 0.025 units.
- Say, the vernier scale contains 25 divisions and these coincide exactly with 24 divisions ofmain scale. Sonowonevernierdivisionisequalto 1/25 of 24 scaledivisions, i.e., 1/25 x 24 x 0.025 = 0.024 unit. Therefore, difference between one main scale small division and one vernier division(leastcountoftheinstrument)equals0.025—0.024,i.e.0.001 unit. It meansifthezero of main scale and zero of vernier coincide, then the first vernier division will read 0.001 units less than the 1 small scale division. Second vernier division willread 0.002 unitlessthan 2 small scaledivisions andsoon. Thusifzero vernierscale lies in between two small divisions on main scale its exact value can be judged by seeing as to which vernier division is coinciding with main scale division.

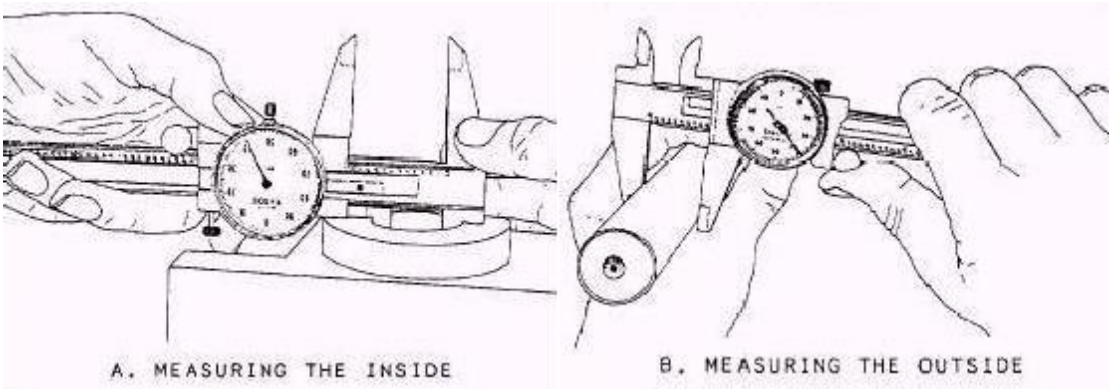

Figure 2.3 Practical Applications of Vernier Calipers

- Thus to read a measurement from a vernier caliper, note the units, tenths and fortieths which the zero on the vernier has moved from the zero on the main scale. Note down the vernier division which coincides with a scale division and add to previous reading the number of thousands of a unit indicated by the vernier divisions
- e.g., reading in the scale shown in Fig. is 3 units + 0.1 unit + 0.075 unit + 0.008 unit = 3.183 units. When using the vernier caliper for internal measurements the width of the measuring jaws must be taken into account. (Generally the width of measuring jaw is 10 mm for MetricSystem).

2.3 Types of Vernier Calipers

- According to IS 3651—1974 (Specification for vernier caliper), three types of vernier calipers have been specified to meet the various needs of external and internal measurements **up to 2000 mm** withvernier **accuracyof 0.02, 0.05 and 0.1 mm.**
- Thethreetypes are called types A, B, Candhavebeenshownin Figs. 2.75, 2.76 and 2.79 respectively. All the three types are made with only one scale on the front of the beam for directreading.
- Type A has jaws on both sides forexternal and internal measurements, and also has a blade for depth measurements. Type B is provided with jaws on one side for external and internal measurements. Type C has jaws on both sides for making the measurements and for marking operations.

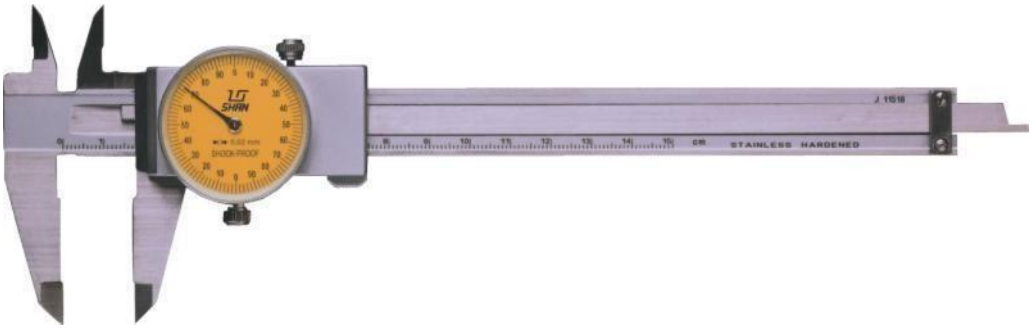

Figure 2.4 Vernier Caliper with Dial

- All parts of the vernier calipers are made of **good quality steel** and the measuring faces **hardened** to **650 H.V. minimum.** The recommended measuring ranges (nominal sizes) of vernier calipers as per IS 3651—1974 are 0—125, 0—200, 0—250. 0—300; 0—500, 0—750, 0—1000, 750—1500 and 750— 2000 mm.
- On type A, scale serves for both external and internal measurements, whereas in case of types B and C, the main scale serves for external measurements and for marking purposes also in type C, but on types B and C internal measurements are made by addingwidthoftheinternal measuring jaws to the reading on the scale. For this reason, the combined width for internal jaws is marked on the jaws in case of types B and C calipers. The combined width shou1d be uniform throughout its length to within 0.01 mm.
- The beam for all the types is made flat throughout its length to within the tolerances of 0.05 mm for nominal lengths up to 300 mm, 0.08 mm from 900 to 1000 mm, and 0.15 mmfor 1500 and 2000 mmsizes, andguidingsurfacesofthebeamaremadestraightto within 0.01 mm formeasuringrangeof200 mmand0.01mmevery200mmmeasuring range of largersize.
- The measuring surfaces are given a fine ground finish. The portions of the jaws between thebeam andthemeasuringfacesarerelieved. Thefixedjawismade an integralpartof the beam and the sliding jaw is made a good sliding fit along with the beam and made to have seizure-free movement along the bar.
- A suitable locking arrangement is provided on the sliding jaw in order to effectively clamp it on the beam. When the sliding jaw is clamped to the beam at any position within themeasuringrange, theexternalmeasurir$_1$gfacesshouldremainsquaretothe guidingsurface of the beam to within 0.003 mm per 100 mm. The measuring surfaces of the fixed and sliding jawsshouldbecoplanartowithin 0.05 mmwhentheslidingjawis

clamped to the beam in zero position. The external measuring faces are lapped flat to within 0.005 mm. The bearing faces of the sliding jaw should preferably be relieved in order to prevent damage to the scale on the beam. Each of the internal measuring surfaces should beparalleltothecorrespondingexternalmeasuringsurfacetowithin

0.025 mm in case of type B and C calipers. The internal measuring surfaces are formed cylindrically with a radius not exceeding one-half of their combined width.

Errors in Measurements With Vernier Calipers

- Errors are usually made in measurements with vernier calipers from manipulation of vernier caliper and its jaws on the work piece.
- Forinstance, inmeasuring an outsidediameter, oneshouldbesurethatthecaliperbar and theplaneofthecaliperjawsaretrulyperpendiculartotheworkpiece'slongitudinal centre line
- i.e. one should be sure that the caliper is not canted, tilted, or twisted. It happens because the relatively long, extending main bar of the average vernier calipers so readily tips in one direction or the other.
- The accuracy of the measurement with vernier calipers to a great extent depends upon the conditionof the jaws of the caliper. The accuracyand thenatural wear, and warping of vernier caliper jaws should be tested frequently by closing them together tightly or setting them to the 0.0 point of the main and vernier scales. In this position the caliper is held against a light source. If there is wear, spring or warp a knock-kneed condition as shown in Fig. (a) Will be observed. If measurement error on this account is expected to be greater than 0.005 mm the instrument shouldnot beused and sent for repair.
- When the sliding jaw frame has become worn or warped that it does not slide squarely & snuglyonmaincaliperbeam, thenjawswouldappear as showninfig. Whereavernier caliper is used mostly for measuring inside diameters, the jaws may become bowlegged as in Fig. (c) Or it's outside edges worn clown as in Fig. (d).

Care in the Use of Vernier Calliper

- No play should be there between the sliding jaws on scale, otherwise the accuracy of the vernier caliperwillbelost. If playexiststhenthegib at thebackofjawassemblymustbe bent so that gib holds the jaw against the frame and play is removed.
- Usually the tips of measuring jaws are worn and that must be taken into account. Most of the errors usually result from manipulation of the vernier caliper and its jaws on the

work piece.

- In measuring an outside diameter it should be insured that the caliper bar and the plane of the caliper jaws are truly perpendicular to the work piece's longitudinal centre line. It should be ensured that the caliper is not canted, tilted or twisted.
- The stationary caliper jaw of the vernier caliper should be used as the reference point and measured point is obtained byadvancingor withdrawing the sliding jaw.
- In general, the vernier caliper should be gripped near or opposite the jaws; one hand for the stationary jaw and the other hand generally supporting the sliding jaw. The instrument shouldnotbeheldbytheover-hanging"tail" formedbytheprojectingmain bar of thecaliper.
- The accuracy in measurement primarily depends on two senses, viz., sense of sight and sense of touch(feel).
- The short-comings of imperfect vision can however be overcome by the use of corrective eye-glass and magnifying glass. But sense of touch is an important factor in measurements. Sense of touch varies from person to person and can be developed with practice and proper handling of tools.
- One very important thing to note here is that sense of touch is most prominent in the finger-tips, therefore, the measuring instrument must always be properly balanced in hand and held lightly in such a way that only fingers handle the moving and adjusting screws etc. If tool be held by force, then sense of feel is reduced.
- Vernier calliper must always be held at short leg of main scale and jaws never pulled.

2.4 Vernier heightgauge

- Vernier height gauge is similar to vernier calliper but in this instrument the graduated bar is held in a vertical position and it isused in conjunction with a surface plate.

- **Construction:**

A vernier height gauge consists of

1. A finely ground and lapped base. The base is massive and robust in construction to ensure rigidity andstability.
2. A vertical graduated beam or column supported on a massive base.
3. Attached to the beam is a sliding vernier head carrying the vernier scale and a clamping screw.

4. An auxiliary head which is also attached to the beam above the sliding vernier head. It has fine adjusting and clamping screw.
5. A measuring jaw or a scriber attached to the front of the sliding vernier

Figure 2.5 Vernier Height Gauge

- **Use.**

- The vernier height gauge is designed for accurate measurements and marking of vertical heights above a surface plate datum.
- It can also be used to measure differences in heights by taking the vernier scale readings at each height and determining the difference by subtraction.
- It can be used for a number of applications in the tool room and inspection department.

  The important features of vernier height gauge are:

  - All the parts are made of good quality steel or stainless steel.
  - The beam should be sufficiently rigid square with the base.
  - Themeasuringjawshouldhaveaclearprojectionfromtheedgeofthebeamatleast equal to the projection of the base' from the beam.
  - The upper and lower gauging surfaces of the measuring jaw shall be flat and parallel to the base.
  - Thescribershouldalsobeofthesamenominaldepth as themeasuringjawsothatit may be reversed.
  - The projection of the jaw should be at least 25 mm.
  - The slider should have a good sliding fit for all along the full working length of the beam.
  - Height gauges can also be provided with dial gauges instead of vernier.

This provides easy and exact reading of slider movement by dial a gauge which is larger and clear.

- **Precautions.**

- When not in use, vernier height gauge should be kept in its case.
- It should be tested for straightness, sureness and parallelism of the working faces of the beam, measuring jaw and scriber.
- The springing of the measuring jaw should always be avoided.

2.5 Vernier Depth Gauge

- Vernier depth gauge is used to measure the depths of holes, slots and recesses, to locate centre distances etc. It consists of

1. A sliding head having flat and true base free from curves and waviness.

2. A graduated beam known as main scale. The sliding head slides over the graduated beam.
3. An auxiliary head with a fine adjustment and a clamping screw.

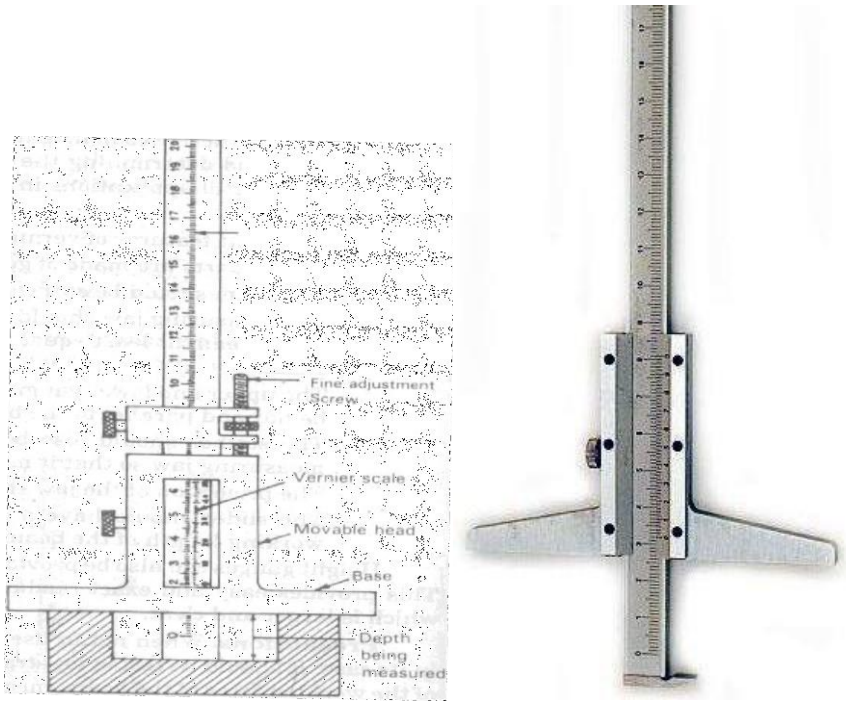

Figure 2.6 Vernier Depth Gauge

- The beam is perpendicular to the base in both directions and its ends square and flat.
- The end of the sliding head can be set at any point with fine adjustment mechanism locked and read from the vernier provided on it, while using the instrument, the base is held firmly on the reference surface and lowers the beam into the hole until it contacts the bottom surface of the hole.
- The final adjustment depending upon the sense of correct feel is made by the fine adjustment screw. The clamping screw is then tightened and the instrument is removed from the hole and reading taken in the same way as the vernier calliper. While using the instrument it should be ensured that the reference surface op which the depth gauge base is rested is satisfactorily true, flat arid square.

2.6 Micrometers

- The micrometer screw gauge essentially consists of an accurate screw having about 10 or 20 threads per cm and revolves in a fixed nut.
- The end of the screw forms one measuring tip and the other measuring tip is constituted by a stationary anvil in the base of the frame. The screw is threaded for

Certain length and is plain afterwards. The plain portion is called sleeve and its end is the measuring surface.

- Thespindleisadvancedorretractedbyturningathimbleconnectedtothespindle. The spindle isaslidefitoverthebarrelandbarrelisthefixedpartattachedwiththeframe.
- The barrel is graduated in unit of 0.05 cm. i.e. 20 divisions per cm, which is the lead of the screw for one complete revolution.
- The thimble has got 25 divisions around its periphery on circular portion. Thus it sub- divides each revolutionofthescrewin25 equalparts, i.e. eachdivisioncorrespondsto 0.002 cm. A lock nut is provided for locking a dimension by preventing motion of the spindle.

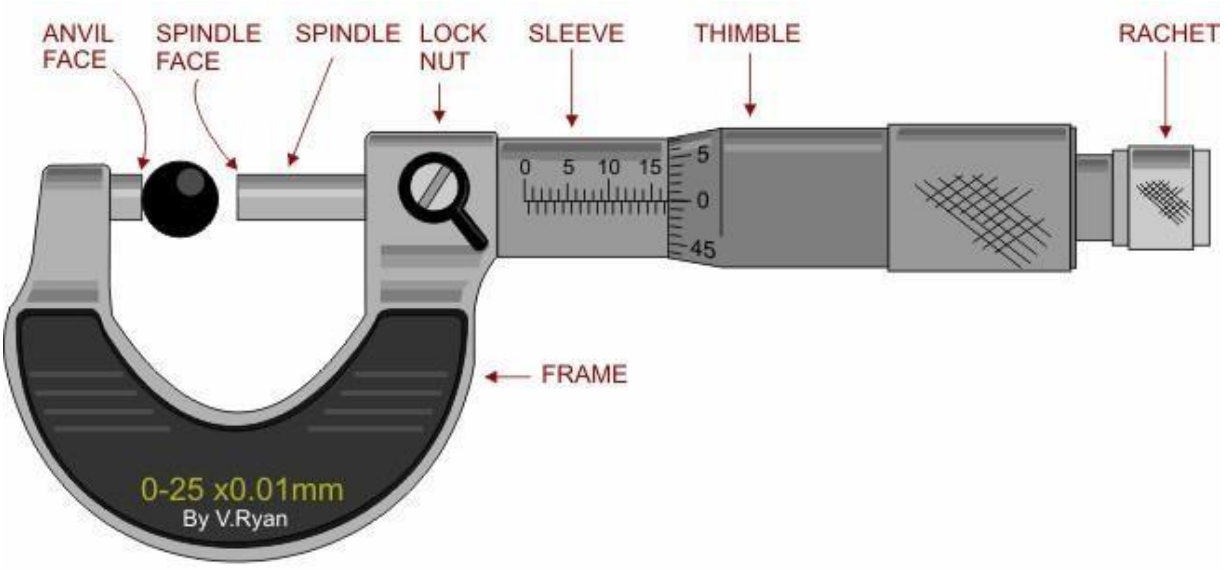

Figure 2.7 Micrometers

- Ratchet stop is provided at the end of the thimble cap to maintain sufficient and uniform measuringpressuresothatstandard conditionsofmeasurementareattained.
- Ratchet stop consists of an overriding clutch held by a weak spring.
- When the spindle is brought into contact with the work at the correct measuring pressure, theclutchstartsslippingandnofurthermovementofthespindletakesplace by the rotation of ratchet. In the backward movement it is positive due to shape of ratchet.

Reading a Micrometer:

- In order to make it possible to read up to **0.0001** inch in micrometer screw gauge, a vernier scale is generally made on the barrel.

- The vernier scale has 10 straight lines on barrel and these coincide with exact 9 divisions on the thimble. Thusone small deviationon thimbleis further subdivided into 10 parts andtakingthe reading one has to see which of the vernier scale division coincides with division of the thimble.
- Accordingly the reading for given arrangement in fig. will be, On

  main barrel :0.120”

  On thimble :0.014”

  Onvernierscale :0.0001”

  Totalreading :0.1342”
- Before taking the reading anvil and spindle must be brought together carefully and initial reading noteddown.Itscalibrationmustbecheckedbyusingstandardgaugeblocks.

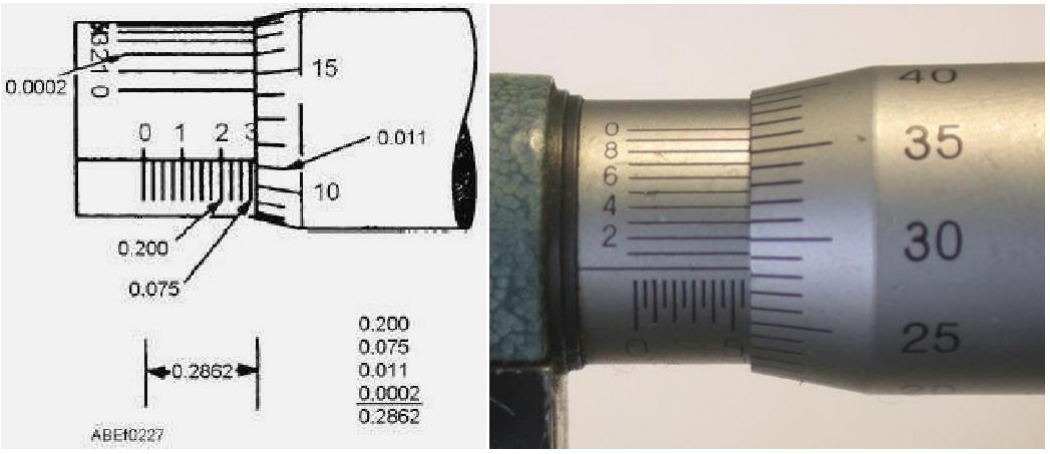

Figure 2.8 Practical Applications of Micrometers

- In metric micrometers, the pitch of the screw thread is 0.5 mm so that one revolution of screw moves it axiallyby 0.5 mm. Main scale on barrel has least division of 0.5 mm. the thimble has 50 divisions on its circumference.
- One division on thimble = 0.5 / 50 mm = 0.1 mm
- If vernier scale is alsoincorporatedthensubdivisions onthethimble can beestimated up to an accuracy of 0.001 mm.
- Reading of micrometer is 3.5 mm on barrel and 7 divisions on thimble

  = 3.5+7 x 0.001= 3.5 + 0.07 = 3.57 mm

Cleaning the Micrometer:

- Micrometer screw gauge should be wiped free from oil, dirt, dust and grit.

- When micrometer feels gummy and dust ridden and the thimble fails to turn freely, it should never be bodily dunked in kerosene or solvent because just soaking the assembled micrometer fails to float the dirt away.
- Further it must be remembered that the apparent stickiness of the micrometer maynot be duetothe grit and gum but toa damaged thread and sprung frame or spindle.
- Everytimethemicrometerisused, measuringsurface, theanvilandspindleshouldbe cleaned. Screw the spindle lightly but firmly down to a clean piece of paper held between spindle andanvil.
- Pull the piece of paper put from between the measuring surface. Then unscrew the spindle few turns and blow out any fuzz or particles of papers that may have clung to sharp edges of anvil and spindle.

Precautions in using Micrometer

- In ordertogetgoodresultsoutoftheuseofmicrometerscrewgauge, theinspectionof the parts must be made as follows. Micrometer should be cleaned of any dust and spindle should movefreely.
- The part whose dimension is to be measured must be held n left hand and the micrometer in right hand. The way for holding the micrometer is to place the small finger and adjoining finger in the U – Shaped frame.
- The forefinger and thumb are placed near the thimble to rotate it and the middle finger supports the micrometer holding it firmly.
- Themicrometerdimensionisset slightlylarger than thesizeofthe part andpart is slid over the contact surfaces of micrometer gently. After it, the thimble is turned till the measuring pressure isapplied.
- In the case of circular parts, the micrometer must be moved carefully over representative arc so as to note maximum dimension only. Then the micrometer reading is taken.
- The micrometers are available in various sizes and ranges, and corresponding micrometer should be chosen depending upon the dimension.
- Errors in reading may occur due to lack of flatness of anvil, lack of parallelism of the anvils at part of scale or throughout, inaccurate setting of zero reading, etc. various tests to ensure these conditions should be carried out from time to time.

2.7 Bore gauge:

- The dial bore gauges shown in fig. are for miniature hole measurements.
- The gauge is supplied with a set of split ball measuring contact points which are hard chrome-plated to retain original spheres.
- Along with the measuring probes, setting rings are also provided to zero set the indicator whenever the probes are interchanged.

Actual ring size is engraved on the ring frames to the closest 0.001 mm value.

Figure 2.9 Bore gauges

2.8 Dial indicators

- **Introduction**

- Dial indicators are small indicating devices using mechanical means such as gears and pinions or levers for magnification system. They are basically used for making and checking linearmeasurements.
- Many a times they are also used as comparators. Dial indicator, in fact is a simple type of mechanical comparator.
- When a dial indicator is used as an essential part in the mechanism any set up for comparison measurement purposes; it is called as a gauge.
- The dial indicator measures the displacement of its plunger or a stylus on a circular dial by means of a rotating pointer.
- Dial indicators are very sensitive and versatile instruments.
- Theyrequirelittleskillintheirusethanotherprecisioninstruments,suchasmicrometer vernier callipers, gauges etc. However, a dial indicator by itself is not of much unless it is properly mounted and set before using for inspection purposes.

Uses:

- Bymounting a dial indicator on anysuitable base and with various attachments, it can be used for variety of purposes as follows.
  1. Determining errors in geometricalforms, e.g., ovalityout-of-roundness, taper etc.
  2. Determining positional errors of surfaces, e.g., in squareness, parallelism, alignment etc.
  3. Taking accurate measurements of deformation (extension compression) in tension and compression testing of material.
  4. Comparing two heights or distances between narrow limits (comparator). The

practical applications of the use of dial indicator are:

1. To check alignment of lathe centers by using a suitable accurate bar between centers.
2. To check trueness of milling machine arbors.
3. To check parallelism of the shaper ram with table surface or like.

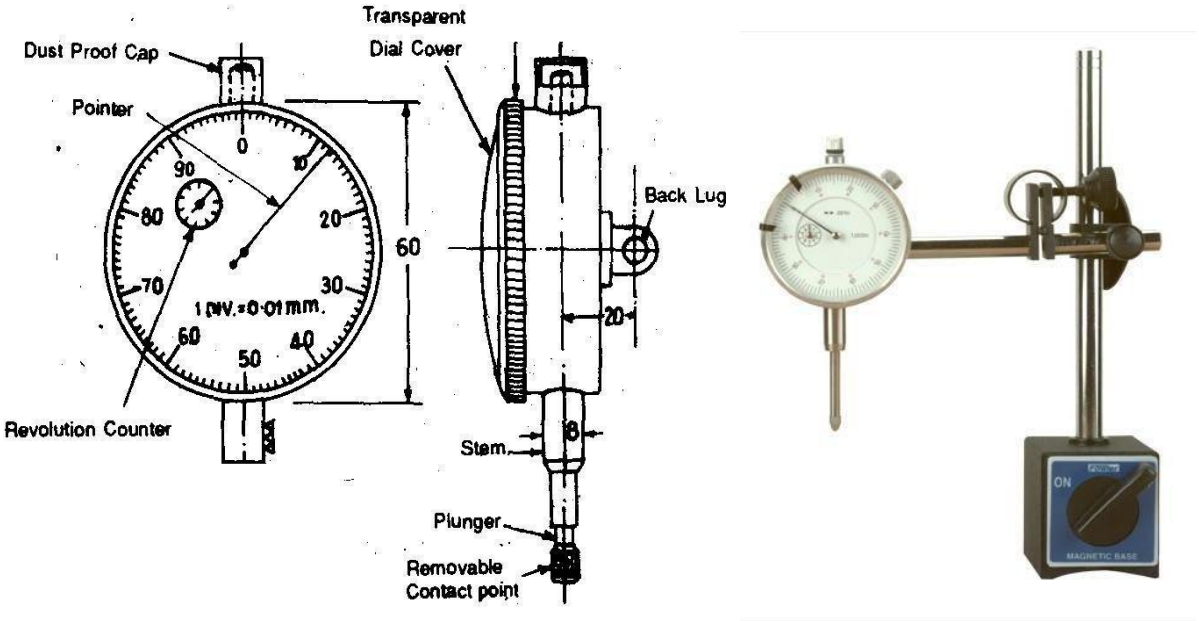

Figure 2.10 Dial Indicators

2.9 Slip Gauges

- Slip gauges or gauge blocks are universally accepted end standard of length in industry. These wereintroducedby Johnson, a Swedishengineer, and are also called as johanson gauges

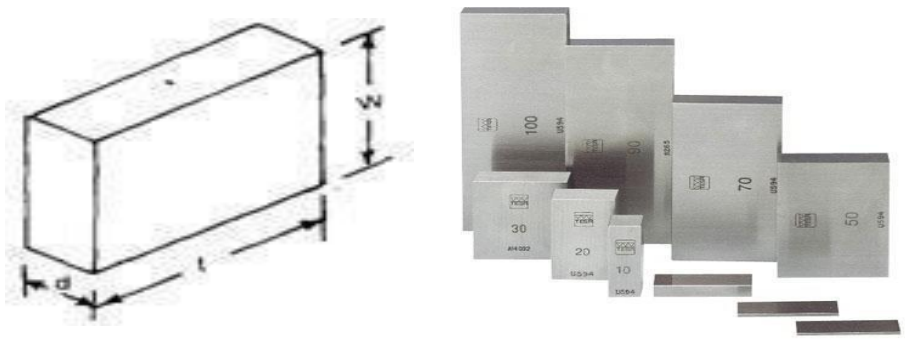

Figure 2.11 Dimensions of a Slip Gauge

- Slip gauges are rectangular blocks of high grade steel with exceptionally close tolerances. These blocks are suitably hardened through out to ensure maximum resistance to wear.
- They are then stabilized by heating and cooling successively in stages so that hardening stresses are removed, After being hardened they are carefully finished by high grade lapping to a high degree of finish, flatness and accuracy.
- For successful use of slip gauges their working faces are made truly flat and parallel. A slip gauge is shown in fig. 3.36. Slip gauges are also made from tungsten carbide which is extremely hard and wear resistance.
- Thecross-sectionsofthesegaugesare9mmx30mmforsizesupto10mmand9mmx 35 mmfor larger sizes. Any two slips when perfectly clean may be wrung together. The dimensions are permanentlymarkedononeofthemeasuringfacesofgaugeblocks

- Gauges blocks are used for:
  1. Direct precise measurement, where the accuracyof the work piece demands it.
  2. For checking accuracy of vernier callipers, micrometers, and such other measuring instruments.
  3. Setting up a comparator to a specific dimension.
  4. For measuring angle of work piece and also for angular setting in conjunction with a sine bar.
  5. Thedistances ofplugs, spigots, etc. onfixture are often bestmeasured withthe slip gauges or end bars for large dimensions.
  6. To check gap between parallel locations such as in gap gauges or between two mating parts.

2.10 Telescopic Gauges

- The telescopic gauge is used for measuring internal diameter of holes, slots and grooves etc. It consistsofahandlewithtworodsinatube at oneendandaworkingscrew at the other end. The rods having spherical contacts can slide within a tube and are forced apart by an internal spring.
- The locking screw can lock the rods at any desired position through a spring. While taking measurements, the rods are pressed closer and inserted into the hole to be measured. The rodsthenopenout totouchthemetalsurface, ofthe holeonbothsides. They are then locked in position bymeans of a lockingscrew. The telescopic gauge is thentakenoutfromthehole.The dimensionacrossthetipsismeasuredbymicrometer or Vernier caliper.

2.11 Introduction to Angular Measurement

- Angular measurements are frequently necessary for the manufacture of interchangeable parts. The ships and aero planes can navigate confidentlywithout the help of the site of the land; only because of precise angular measuring devices can be used in astronomy to determine the relation of the stars and their approximate distances.
- The angle is defined as the opening between two lines which meet at a point. If one of the two lines is moved at a point in an arc, a complete circle can be formed.
- Thebasicunitinangularmeasurementistherightangle, whichisdefined as theangle between two lines which intersect so as to make the adjacent angles equal.
- If a circle is divided into 360 equal parts. Each part is called as degree (^{0}). Each degree is divided in 60 minutes (‘), and each minute is divided into 60 seconds (“).
- This method of defining angular units is known as sexagesimal system, which is used for engineering purposes.
- An alternativemethodofdefiningangleisbasedontherelationshipbetweentheradius and arc of a circle. It is called as radian.
- Radian is defined as the angle subtended at the centre by an arc of a circle of length equal to itsradius.
- It is more widely used in mathematical investigation.

  2 radians = 360, giving,

  1 radian = 57.2958 degrees.

- In addition linear units such as 1 in 30 or millimeters per meter are often used for specifying tapers and departures from squareness or parallelism.

2.12 Bevel Protector

- It is probably the simplest instrument for measuring the angle between two faces of component.
- It consists of a base plate attached to the main body, and an adjustable blade which is attached to a circular plate containing vernier scale. The adjustable blade is capable of rotating freely about the centre of the main scale engraved on the body of the instrument and can be locked in any position.
- An acute angle attachment is provided at the top; as shown in fig. for the purpose of measuring acute angles. The base of the base plate is made flat so that it could be laid flat upon theworkandanytypeofanglemeasured. It is capableofmeasurementfrom 0^0 to 360^0
- The vernier scale has 24 divisions coinciding with 23 main scale divisions. Thus the least countof the instrument is 5'. This instrument is most commonly used in workshops for angular measurements till more precision is required.
- A recent development of the vernier bevel protector is optical bevel protector. In this instrument, a glass circle divided at 10' intervals throughout the whole 360^0 is fitted inside the mainbody.
- A small microscope is fitted through which the circle graduations can be viewed. The adjustable blade is clamped to a rotating member who carries this microscope. With the aid of microscope it is possible to read by estimation to about 2'.

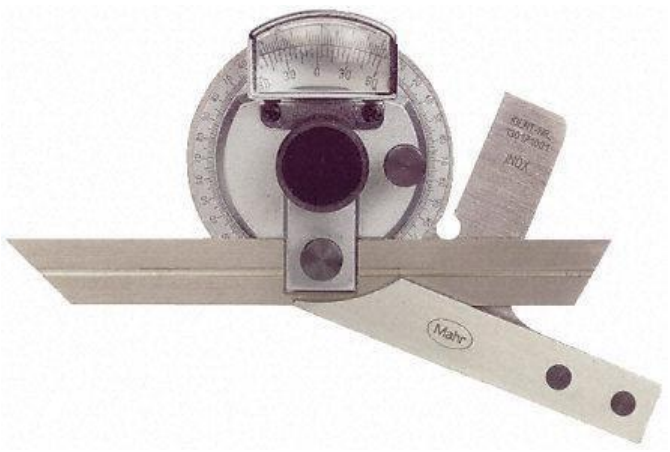

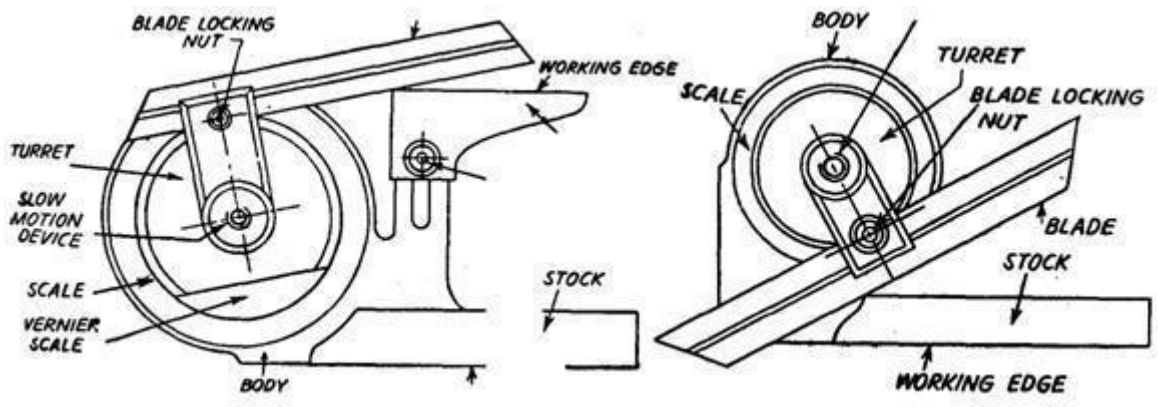

Figure 2.12 Bevel Protector

Universal Bevel Protector

- It is used for measuring and laying out of angles accurately and precisely within 5 minutes. The protector dial is slotted to hold a blade which can be rotated with the dial to the required angleandalsoindependentlyadjustedtoanydesiredlength. Theblade can be locked in any position.

Bevel Protectors as Per Indian Standard Practice

The bevel protectors are of two types, viz.

1. Mechanical Bevel Protector,and
2. Optical Bevel Protector.

1. Mechanical bevel protector:

- The mechanical bevel protectors are further classified intofourtypes; A, B, C and D.
- In types A and B, the vernier is graduated to read to 5 minutes of arc whereas in case of type C, the scale is graduated to read in degrees and the bevel protector is without vernier or fine adjustment device or acute angle attachment.
- The difference between types A and B is that type A is provided with fine adjustment deviceoracuteangleattachmentwhereastype Bisnot. Thescalesofallthetypesare graduated either as afullcirclemarked 0—90—0—90 withonevernieror as semicircle marked 0—90—0 with two verniers 180^0 apart.
- Type D is graduated in degrees and is not provided with either vernier or fine adjustment device or acute angle attachment.

2. Optical bevel protector:

- In the case of optical bevel protector, it is possible to take readings up to approximately 2 minutesofarc.Theprovisionismadeforaninternalcircularscalewhichisgraduated

in divisions of 10 minutes of arc.

- Readings are taken against a fixed index line or vernier by means of an optical magnifying system which is integral with the instrument. The scale is graduated as a full circle marked 0—90—0—90. The zero positions correspond to the condition when the blade is parallel to the stock. Provision is also made for adjusting the focus of the system to accommodate normal variations in eye-sight. The scale and vernier are so arranged that they are always in focus in the optical system.

Various Components of Bevel Protectors

Body: It isdesignedinsuchawaythatitsbackisflatandthere arenoprojectionsbeyondits back so that when the bevel protector is placed on its back on a surface plate there shall be no perceptible rock. The flatness of the working edge of the stock and body is tested by checking the squareness of blade with respect to stock when blade is set at 90^0.

Stock: The working edge of the stock is about 90 mm in length and 7 mm thick. It is very essential that the working edge of the stock be perfectly straight and if at all departure is there, it should be in the form of concavityand of the order of 0.01 mm maximum overthe whole span.

Blade: It can be moved along the turret throughout its length and can also be reversed. It is about 150 or 300 mm long, 13 mm wide and 2 mm thick and ends beveled at angles of 45^0 and 60^0 within the accuracy of 5 minutes of arc. Its working edge should be straight upto

0.02 mm and parallel upto 0.03 mm over the entire length of 300 mm. It can be clamped in any position.

Actual Angle Attachment

It can be readily fitted into body and clamped in any position. Its working edge should be flat to within 0.005 mm and parallel to the working edge of the stock within 0.015 mm over the entire length of attachment.

The bevel protectors are tested for flatness, squareness, parallelism, straightness and angular intervals by suitable methods.

2.13 Sine Principle and Sine Bars

- The sine principle uses the ratio of the length of two sides of a right triangle in derivinga given angle.Itmaybenotedthatdevicesoperatingonsineprinciplearecapableof“self generation.”

- The measurement is usually limited to 450 from loss of accuracy point of view. The accuracy with which the sine principle can be put to use is dependent in practice, on some form of linear measurement.
- The sine bar in itself is not a complete measuring instrument. Another datum such as a surface plate isneeded, as well as otherauxiliaryequipment, notablyslipgauges, and indicating device to make measurements. Sine bars used in conjunction with slip gauges constitute a very good device for the precise measurement of angles.
- Sine bars are used either to measure angles very accurately or for locating any work to a given angle within very close limits.
- Sine bars are made from high carbon, high chromium, corrosion resistant steel, hardened, ground andstabilized.

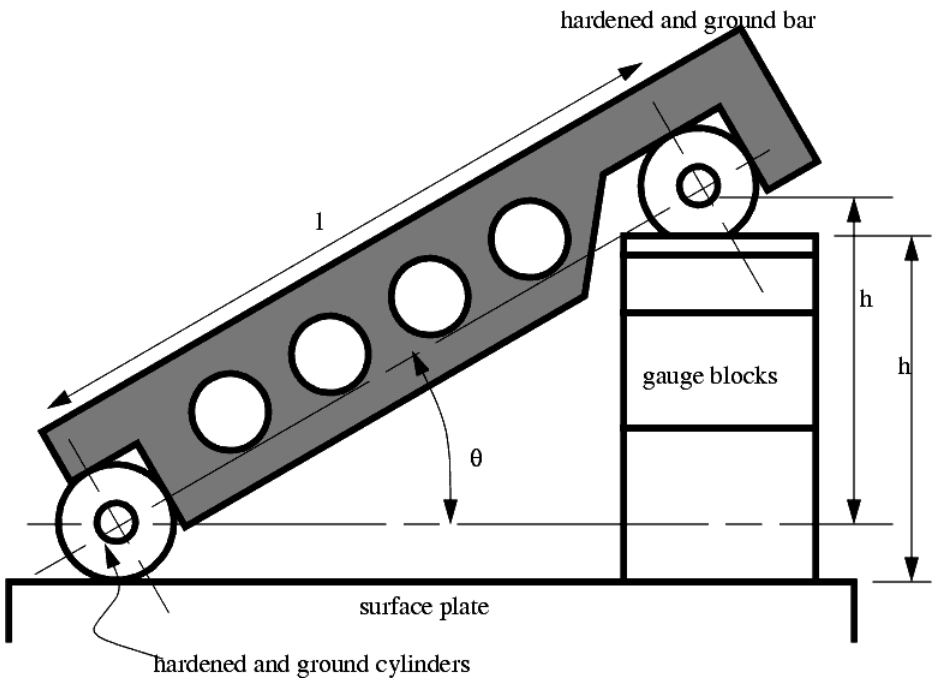

Figure 2.13 Use of sine bar

Where, L = distance between centers of ground cylinder (typically 5'' or 10'') H = height of the gauge blocks

Θ=theangleoftheplane Θ

= a sin (h/l)

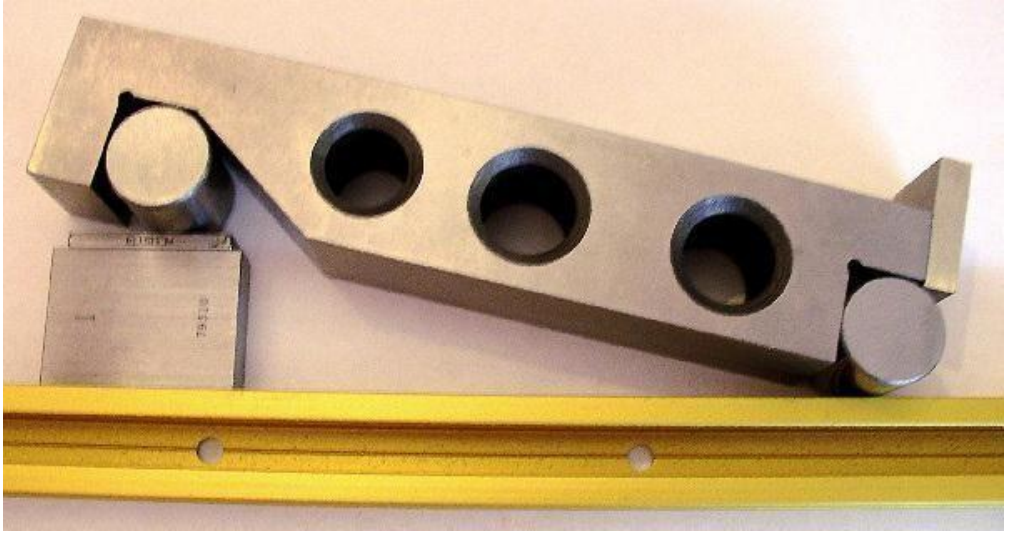

Figure 2.14 Practical Application of sine bar

Use of sine bar:

1. Measuringknown anglesor locatinganyworkto a given angle. Forthispurposethe surface plate is assumed to be having a perfectly flat surface, so that its surface could be treated as horizontal.

   One of the cylinders or rollers of sine bar is placed on the surface plate and other roller is placed on the slip gauges of height h. Let the sine bar be set at an angle q. Then sin □= h/l, where l is the distance between the center of the rollers. Thus knowing, h can be found out and anywork could be set at this angle as the top face of sine bar is inclined at angle □ to the surface plate.

   The use of angle plates and clamps could —also be made in case of heavy components.

   For better results, both the rollers could also be placed on slip gaugesChecking of unknown angles. Manya times, angle of a component to be checked is unknown. In such a case, it is necessary to first find the angle approximately with the help of a bevel protector.

   Let the angle be 8. Then the sine bar is set at an angle□and clamped to an angle plate. Next, the work is placed on sine bar and clamped to angle plate as shown in Fig. And a dial indicator is set at one end of the work and moved to the other, and deviation is noted. Again slip gauges are so adjusted (according to this deviation) that dial indicator reads zero across work surface. Fig.

   If deviation noted down by the dial indicator is ôh over a length *l'* of work, then

height of slip gauges by which it should be adjusted is equal to = ôh x *l/l'*

Checking of unknown angles of heavy component. In such cases where components are heavy and can't be mounted on the sine bar, then sine bar is mounted on the component as shown in Fig.

Theheightovertherollers can thenbemeasuredbya vernierheight gauge; usinga dial test gauge mounted on the anvil of height gauge as the fiducially indicator to ensure constant measuring pressure. The anvil on height gauge is adjusted with probe of dial test gauge showing same reading for the topmost position of rollers of sine bar. Fig. Surface plate shows the use of height gauge for obtaining two readings for either of the Fig. shows the use of height gauge for obtaining two readings for either of the roller of sine bar. Thedifferenceofthetworeadingsofheightgaugedividedbythecentredistanceof sine bar gives the sine of the angle of the component to be measured. Where greateraccuracyis required, the position of dial test gauge probe can be sensed by adjusting a pile of slip gaugestilldialindicatorindicatessamereadingoverrollerof sine bar and the slip gauges.

1.4 Angle Gauges

- The first set of combination of angle gauges was devised by Dr. Tomlinson of N.P.L. With thirteen separate gauges used in conjunction with one square block and one parallel straight-edge, itispossibletosetupanyangletothenearest 3" In thesameway, as slip gaugesarebuiltup togivealineardimension, Itheanglegaugescanbebuilduptogive a required angle.
- Angle gauges PIVOT are made of hardened steel and seasoned carefully to ensure permanence of angular accuracy, and the measuring faces are lapped and polished to a high degree of accuracy and flatness like slip gauges. These gauges are about 3 inch (76.2 mm) long, 5/8 inch (15.87 mm) wide with their faces lapped to within 0.0002 mm and angle between the two ends to ±2 seconds.
- The secret of this system in having any angle in step of 3'' is the adoption of a mathematical series of the values of the angles of various gauges of the set.
- Thethirteen gauges can bedividedintothreeseries; degrees, minutesandfractionsofa

minute. The gauges available in first series are of angle 1^0, 3^0, 9^0, 27^0, and 41^0. Second series comprises 1', 3', 9' and 27' angle gauges and this series has 0.05', 0.1', 0.3' and 0.5' (or 3", 6", 18" and 30") angle gauges.

- All these angle gauges in combination can be added or subtracted, thus, making a large number of combinations possible. There are two sets of gauges available, designated as A and B. The standard A contains all the above 13 gauges. Standard B contains only 12 gauges and does not have, the 0.05' angle gauge.
- Direct combination enables computation of any angle up to 81^0 40.9' and angles larger than this can be made up with the help of the square block. However, an additional gauge of 9^0 can also be supplied with the set to obtain a full 90^0 angle without the use of the square. Fig. illustrates how the gauges can be used in addition and subtraction. The procedure used for making various angles is as follows e.g. say, we have to build up an angle of 57^0 38' 9".
- First we pay our attention towards degree only. So 57^0 could be built up as $41^0 + 27^0 - 9^0 + 1^0 - 3^0$
- Next if the minutes are less than 40', they could be built up directly, otherwise number of degrees must be increased by 1^0 and the number of minutes necessary to correct the total is subtracted. Here now 34' could be built 27'+9'—3'+ 1' and lastly 9" is built up as 0.1'+ 0.05'.
- It may be noted that each angle gauge is marked with engraved V which indicates the direction of included angle. When the angles of individual angle gauges are to be added up then the V_S of all angle gauges should be in line and when any angle is to be subtracted, its engraved V should be in other direction.
- Thus it is seen that any angle could be made up but the block formed by the combination of a number of these gauges is rather bulky and, therefore, cannot be always directly applied to the work. But these gauges being used as reference and taking the aid of other angle measuring devices will be a good proposal at many places.
- Angle gauge blocks seem to lack the requisites for use as primary standards because errors are easily compounded when angle blocks are wrung in combination. Further the absolute verification of angle blocks is usually dependent on some other primary standard.

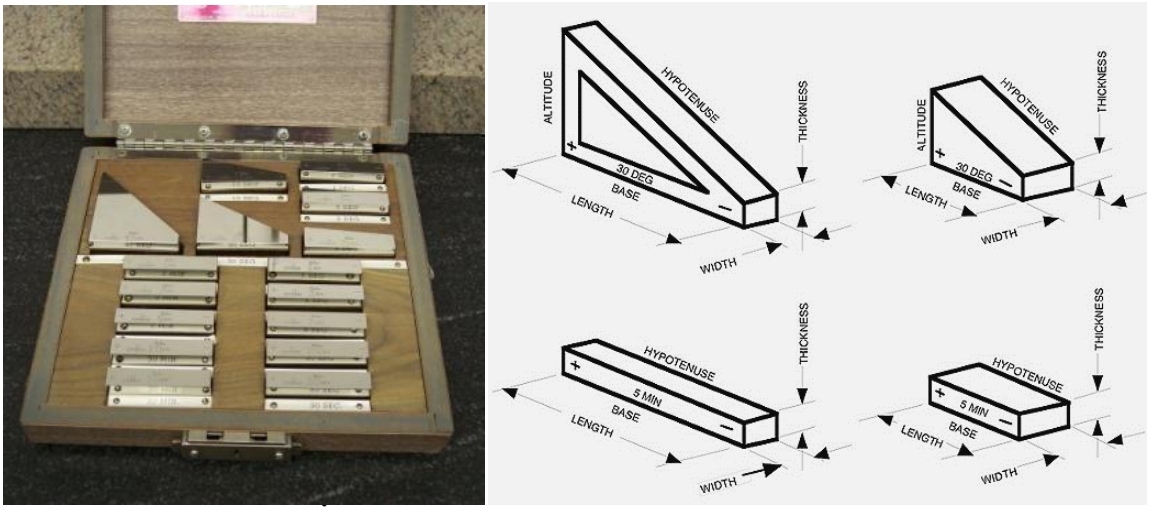

Figure 2.15 Set of angle gauges

Uses of Angle Gauges

Direct use of angle gauges to measure the angle in the die insert:

- To test the accuracy of the angle in the die insert, the insert is placed against an illuminatedglasssurfaceplateorinfrontof an inspectionlightbox. Thecombination of angle gauges is so adjusted and the built-up combination, of angle gauges carefully inserted in position so that no white light can be seen between the gauge faces and die faces. It may be noted that when all the engraved Vs on the angle gauges are in the same line, all angles are added up. In case some engraved Vs on anglegaugesareon other side, those angles are subtracted.

Use of angle gauges with square plate:

- As already indicated, the use of square plate increases the versatility of the application of angle gauges. Generally, the square plate has its 90^0 angles guaranteed to within 2 seconds of arc. Where very high degree of accuracy is required, thefourcornersofthe squareplatearenumbered as A, B, Cand D, andatest certificate are issued with each set of angle gauges, giving the measured angle of each corner. The whole set up is placed against an illuminated glass surface plate. It may be noted that the use of slip gauges has to be made in order to facilitate the testing.

So far, we have used angle gauges to obtain a visual comparison of an angular dimension under test. It has also been realized that though it may be possible to obtain good results but it is difficult to give an estimate of the actual angular error. For very precise angular measurements, angle gauges are used in conjunction with angle dekkor.

1.5 Autocollimators

This is an optical instrument used for the measurement of small angular differences. For small angular measurements, autocollimator provides a very sensitive and accurate approach. Auto-collimator is essentially an infinity telescope and a collimator combined into

one instrument. The principle on which this instrument works is given below. O is a point source of light placed at the principal focus of a collimating lens in Fig. 8.30. The rays of light from O incident on the lens will now travel as a parallel beam of light. If this beam now strikes a plane reflector which is normal to the optical axis, it will be reflected back along its own path and refocused at the same point O. If the plane reflector be now tilted through a small angle 0, [Refer Fig] then parallel beam will be deflected through twice this angle and will be brought to focus at O' in the same plane at a distance x from O. Obviously OO'=x=2θ.f, where *f* is the focal length of the lens.

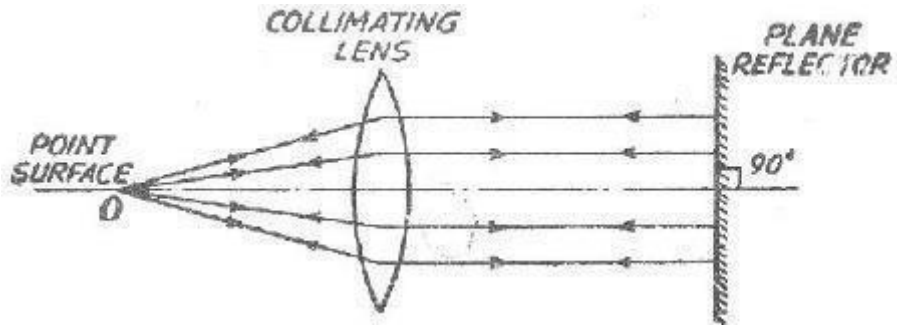

There are certain important points to appreciate here:

The position of the final image does not depend upon the distance of reflector from the lens, i.e. separation x is independent of the position of reflector from the lens. But if reflector is moved too much back then reflected rays will completely miss the lens and no image will be formed. Thus for full range of readings of instrument to be used, the maximum remoteness of the reflector is limited.

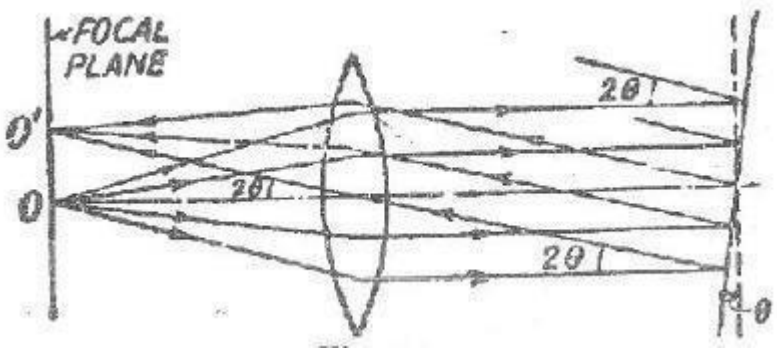

For high sensitivity, i.e., for large value of x for a small angular deviation θ, a long focal length is required.

Principle of the Autocollimator

A crossline "target" graticule is positioned at the focal plane of a telescope objective system with the intersection of the crossline on the optical axis, i.e. at the principal focus.

When the target graticule is illuminated, rays of light diverging from the intersection point reach the objective via a beam splitter and are projected-from the objective as parallel pencils of light. In this mode, the optical system is operating as a “collimator”

A flat reflector placed in front of the objective and exactly normal to the optical axis reflects the parallel pencils of light back along their original paths. They are then brought to focus in the plane of the target graticule and exactor coincident with its intersection. A proportion of the returned light passes straight through the beam splitter and the return image of the target crossline is therefore visible through the eyepiece. In this mode, the optical system is operating as a telescope focused at infinity.

If the reflector is tilted through a small angle the reflected pencils of light will be deflected by twice the angle of tilt (principle of reflection) and will be brought to focus in the plane of the target graticule but linearly displaced from the actual target crosslines by an amount $2\theta * f$.

Linear displacement of the graticule image in the plane of the eyepiece is therefore directly proportional to reflector tilt and can be measured by an eyepiece graticule, optical micrometer no electronic detector system, scaled directly in angular units. The autocollimator is set permanently at infinity focus and no device for focusing adjustment for distance is provided or desirable. It responds only to reflector tilt (not lateral displacement of the reflector).

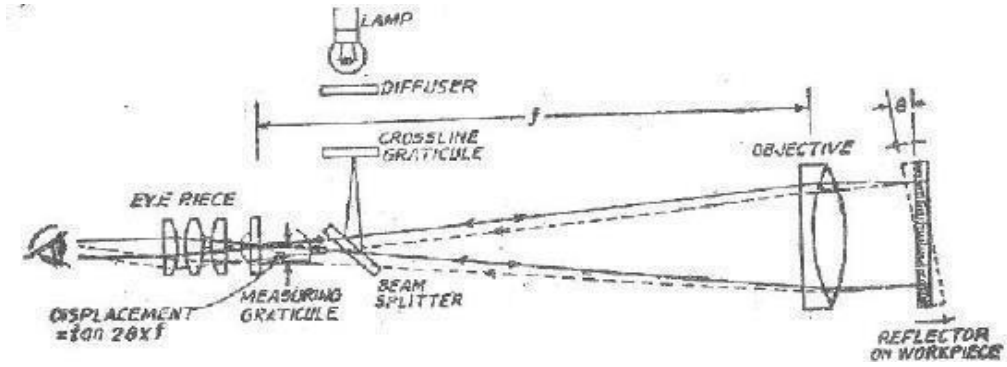

This is independent of separation between the reflector and the autocollimator, assuming no atmospheric disturbance and the use of a perfectly flat reflector. Many factors govern the specification of an autocollimator, in particular its focal length and its effective aperture. The focal length determines basic sensitivity and angular measuring range. The longer the focal length the larger is the linear displacement for a given reflector tilt, but the maximum reflector tilt which can be accommodated is consequently reduced. Sensitivity is

Therefore traded against measuring range. The maximum separation between reflector and autocollimator, or "working distance", is governed by the effective aperture of the objective and the angular measuring range of the instrument becomes reduced at long working distances. Increasing the maximum working distance by increasing the effective aperture then demands a larger reflector for satisfactory image contrast. Autocollimator design thus involves many conflicting criteria and for this reason a range of instruments is required to optimally cover every application.

Air currents in the optical path between the autocollimator and the target mirror cause fluctuations in the readings obtained. This effect is more pronounced as distance from autocollimator to target mirror increases. Further errors may also occur due to errors in flatness and reflectivity of the target mirror which should be of high quality.

When both the autocollimator and the target mirror gauge can remain fixed, extremely close readings may be taken and repeatability is excellent. When any of these has to be moved, great care is required.

Tests for straightness

It can be carried out by using spirit level or auto-collimator. The straightness of any surface could be determined by either of these instruments by measuring the relative angular positions of number of adjacent sections of the surface to be tested. So first a straight line is drawn on the surface whose straightness is to be tested. Then it is divided into a number of sections, the length of each section being equal to the length of spirit level base or the plane reflector's base in case of auto-collimator. Generally the bases of the spirit level block or reflector are fitted with two feet so that only feet have line contact with the surface and whole of the surface of base does not touch the surface to be tested. This ensures that angular deviation obtained is between the specified two points. In this case length of each section must be equal to distance between the centre lines of two feet. The spirit level can be used only for the measurement of straightness of horizontal surfaces while auto-collimator method can be used on surfaces in any plane. In case of spirit level, the block is moved along the line on the surface to be tested in steps equal to the pitch distance between the centre lines of the feet and the angular variations of the direction of block are measured by the sensitive level on it. Angular variation can be correlated in terms of the difference of height between two points by knowing the least count of level and length of the base.

In case of measurement by auto-collimator, the instrument is placed at a distance of 0.5 to 0.75 metre from the surface to be tested on any rigid support which is independent of the surface to be tested. The parallel beam from the instrument is projected along the length

of the surface to be tested. A block fixed on two feet and fitted with a plane vertical reflector is placed on the surface and the reflector face is facing the instrument. The reflector and the instrument are set such that the image of the cross wires of the collimator appears nearer the centre of the field and for the complete movement of reflect or along the surface straight line, the image of cross-wires will appear in the field of eyepiece. The reflector is then moved to the other end of the surface in steps equal to the centre distance between the feet and the tilt of the reflector is noted down in seconds from the eyepiece.

Therefore, 1 sec. of arc will correspond to a rise or fall of 0.000006* l mm, where I is the distance between centers of feet in mm. The condition for initial and subsequent readings is shown in Fig. 7.2 in which the rise and fall of the surface is shown too much exaggerated.

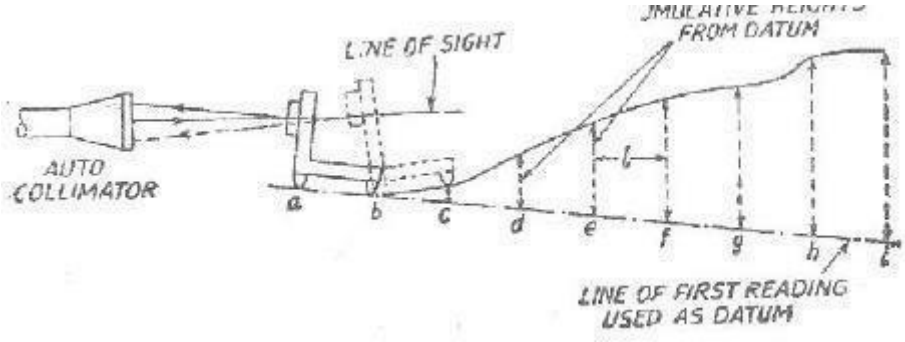

With the reflector set at a-b (1st reading), the micrometer reading is noted and this line is treated as datum line. Successive readings at b-c, c-d, d-e etc. are taken till the length of the surface to be tested has been stepped along. In other to eliminate any error in previous set of readings, the second set of readings could be taken by stepping the reflector in the reverse direction and mean of two taken. This mean reading represents the angular position of the reflector in seconds relative to the optical axis or auto-collimator.

Column 1 gives the position of plane reflector at various places at intervals of *'l'* e.g. a-b, b-c, c-d etc., column 2 gives the mean reading of auto-collimator or spirit level in seconds. In column 3, difference of each reading from the first is given in order to treat first reading as datum. These differences are then converted into the corresponding linear rise or fall in column 4 by multiplying column 3 by *'l'*. Column 5 gives the cumulative rise or fall, i.e., the heights of the support feet of the reflector above the datum line drawn through their first position. It should be noted that the values in column 4 indicate the inclinations only and are not errors from the true datum. For this the values are added cumulatively with due regard for sign. Thus it leaves a final displacement equal to L at the end of the run which of course does not represent the magnitude of error of the surface, but is merely the deviation from a

straight line produced from the plane of the first reading. In column 5 each figure represents a point, therefore, an additional zero is put at the top representing the height of point *a*.

The errors of any surfaced may be required relative to any mean plane. If it be assumed that mean plane is one joining the end points then whole of graph must be swung round until the end point is on the axis. This is achieved by subtracting the length L proportionately from the readings in column 5. Thus if n readings be taken, then column 6 gives the adjustments— L/n, —2L/n… etc., to bring both ends to zero. Column 7 gives the difference of columns 5 and 6 and represents errors in the surface from a straight line joining the end points. This is as if a straight edge were laid along the surface profile to be tested and touching the end points of the surface when they are in a horizontal plane and the various readings in column 7 indicate the rise and fall relative to this straight edge.

10.5.1 Optical Flats

The most common interference effects are associated with thin transparent films or wedges bounded on at least one side by a transparent surface. Soap bubbles, oil films on water, and optical flats fall in this category. The phenomenon by which interference takes place is readily described in terms of an optical flat, as shown in Fig. 10.14.

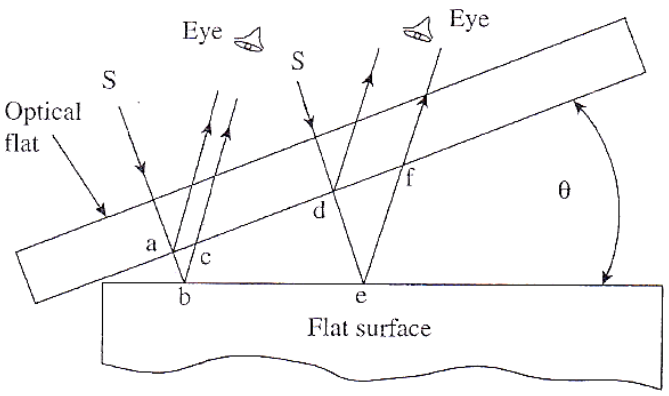

Fig. 10.14 Fringe formation in an optical flat

An optical flat is a disk ofhigh-qualityglass or quartz. The surface of the disk is ground and lapped to a high degree of flatness. Sizes of optical flats vary from 25 to 300mm in diameter, with a thickness ranging from 25 to 50mm. When an optical flat is laid over a flat reflecting surface, it orients at a small angle 0, due to the presence of an air cushion between the two surfaces. This is illustrated in Fig. 10.14. Consider a ray of light from a monochromatic light source falling on the upper surface of the optical flat at an angle. This light ray is partially reflected at point 'a'. The remaining part of the light ray passes through the transparent glass material across the air gap and is reflected at point 'b' on the flat work surface. The tworeflected components of the light ray are collected and recombined by the eye, having travelled two different paths whose length differs by an amount 'abc'.

If 'abc' = $\lambda/2$, where λ is the wavelength of the monochromatic light source, then the condition

for complete interference has been satisfied. The difference in path length is one- half the wavelength, aperfectconditionfortotalinterference, as explainedin Section 10.4. The eye is now able to see a distinct patch of darkness termed a fringe. Next, consider anotherlightrayfromthe samesourcefallingonthe optical flat at asmall distancefromthe first one. This ray gets reflected at points ‘d’ and 'e'. If the length 'def ' equals 3λ /2, then total interference occurs again and a similarfringeisseenbytheobserver. However, at an intermediate point between the two fringes, the path difference between two reflected portions of the light ray will be an even number of half wavelengths. Thus, the two components of light will be in phase, and a light band will be seen at this point.

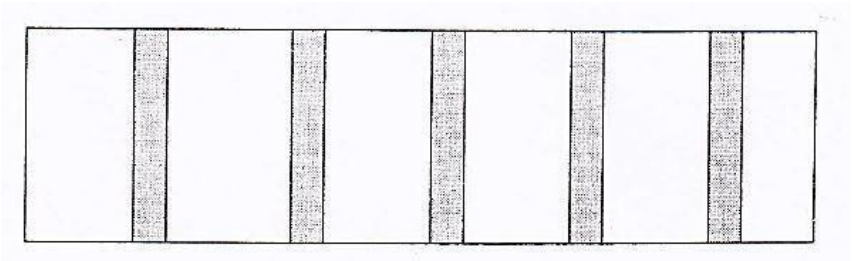

Fig. 10.15 Interference fringes

To summarize, when light from a monochromatic light source is made to fall on an optical flat, which is oriented at a very small angle with respect to a flat reflecting surface, a band of alternate light and dark patches is seen by the eye. Figure 10.15 illustrates the typical fringe patternseenona flat surface viewed under an optical flat. In case of a perfectly flat surface, the fringe pattern is regular,parallel,anduniformlyspaced.Anydeviationfromthispattern is a measure of error in the flatness of the surface being measured.

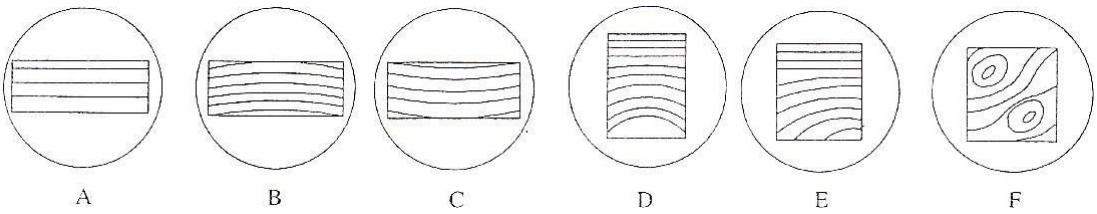

Fig. 10.16 Fringes pattern reveal surface conditions

Fringe patterns provide interesting insights into the surface being inspected. They reveal surface conditions like contour lines on a map. Figure 10.16 illustrates typical fringe patterns. Once we recognize surface configurations from their fringe patterns, it is much easier to measure the configurations.

Unit-3

Screw Thread And Gear Measurement

12

ACCEPTANCE TESTS FOR MACHINE TOOLS

Introduction

The quality and accuracy of the finished work depends on the accuracy of the machine tools used in their production. The machine tools must be able to produce workpieces of given accuracy within prescribed limits consistently.

It is for this reason the machine tools are tested at various stages, during assembly, after assembly, erection, repairs or overhauls as per accuracy test chart in order to determine whether it meets the requirement of specification or not.

The acceptance test of machine tool includes :

1. Alignment test or Geometrical test.
2. Performance test or practical test.

The alignment test is carried out to check the grade of manufacturing accuracy of the machine tool. It consists of checking the relationship between various machine elements (such as bed, table, spindle etc.) when the machine tool is idle and unloaded.

Performance test consists of checking the accuracy of the finished components and is known as practical test. The performance test, therefore, consists of preparing the actual test jobs on the machine and checking the accuracy of the jobs produced. Performance test is carried out to know whether the machine tool is capable of producing the parts within the specified limits or not.

In addition to the manufacturing accuracy the working accuracy of the machine is influenced by the following factors.

1. Geometry of the cutting tool (rake angle, clearance angle, etc).
2. Material of the cutting tool, shape and rigidity;
3. Material of the workpiece, its size, shape and rigidity,
4. Cutting speed, feed and depth of cut,
5. Work holding and clamping equipment,
6. Skill of the operator.
7. Working conditions etc.

Scanned by CamScanner

Alignment or Geometrical Tests

Before conducting Geometrical tests it is essential that the machine is set up and principal horizontal and practical planes and axes are checked with spirit level etc.

The various geometrical/alignment checks generally carried out on machine tools are :

1. Straightness of guide ways and slide ways of machine tool.
2. Flatness of machine tables and slide ways.
3. Parallelism, equidistance and alignment of the slide ways and axes of various moving parts with reference to some standard planes.
4. True running and alignment of shafts and spindle relative to other areas and surfaces.
5. The error of pitch or lead of lead screw.
6. Pitch errors of gears.
7. Dividing errors of dividing heads/indexing devices.
8. Eccentricity, out of roundness, periodical axial slip, camming etc.

Main spindle is the fundamental element of the machine and is tested for eccentricity, axial slip, accuracy of axis and position, relative to other axes and surfaces.

Equipment required for geometrical tests

The measuring equipments used for alignment tests are :

1. Dial gauges
2. Test mandrels
3. Straight edges and squares
4. Spirit level
5. Auto collimator
6. Waviness metre etc.

Dial gauges. Dial gauges are widely used in alignment tests. The dial gauges selected should have measuring accuracy of 0.01 mm. The dial gauge must be mounted on robust and stiff base in order to avoid displacement due to shocks and vibrations. The initial plunger pressure should vary between 40 and 100 gm; for very fine measurement, a lower pressure as small as 20 gm is desirable.

Test Mandrels. These are used for checking the true running of the spindle. Two types of test mandrels used are :

(*a*) Mandrels with a cylindrical measuring surface and taper shank which can be inserted into the taper bore of the main spindle.

(*b*) Cylindrical mandrel which can be held between centres. Test mandrels are hardened, ground and made to length which varies from 100 to 300 mm.

Straight edges and squares. Straight edge of cast iron or steel should be heavy, well ribbed and seasoned. A square must have a wider bearing surface. Steel square is a precision tool used for laying out lines or for testing of squareness of two surfaces with each other.

The error at the top of standard square should be less than ± 0.01 mm, of a precision less than ± 0.005 mm.

Scanned by CamScanner

Straight edge is placed on machined surfaces to check them for flatness or straightness.

Spirit level. Spirit levels are used for high grade precision work. Spirit levels used are in the shape of a bubble tube which is mounted on a cast iron base. Spirit levels should have a sensitivity of about 0.04 to 0.06 mm per metre for each deflected division. Two main types of spirit levels used for acceptance test are :

(*a*) Horizontal spirit level (*b*) Frame spirit level.

Auto Collimator. Auto collimater is very sensitive instrument. It can be used for checking deflections of long beds in horizontal, vertical or inclined planes.

Waviness Metre. Waviness metre with 50 : 1 magnification is useful in recording and examining the surface waviness.

Alignment Telescope. Optical alignment telescope can be used to indicate errors of alignment in both the vertical and horizontal planes of the optical axis.

Machine Tool Tests. The tests applied for machine tools irrespective of type, fall into well defined group which may be summarised as follows :

1. The level of installation of the machine in the horizontal and vertical planes.
2. Flatness of machine bed and straightness and parallelism of bed ways or bearing surfaces.
3. Test for true running of the main spindle and its axial movement.
4. Test for parallelism of spindle axis to guide ways or bearing surface.
5. Tests for the line of movement of various members e.g. saddle and table cross-slides etc, along their ways.
6. Practical test in which some test pieces are machined and their accuracy and finish checked.

Alignment Tests for Lathe

1. Test for level of installation.

(*a*) In longitudinal direction. (*b*) In transverse direction.

Measuring instruments. Spirit level, gauge block to suit the guide ways of the lathe bed.

Procedure. The gauge block with the spirit level is placed on the bed ways on the front position, back position and in the cross wise direction. The position of the bubble in the spirit level is checked and the readings are taken.

Permissible error. Front guide ways. 0.02 mm/metre convex only. Rear guide ways, 0.01 to 0.02 convexity. Bed level in cross-wise direction ± 0.02/metres. Straightness of slide ways (for machines more than 3 m turning length only, measurements taken by measuring taught wire and microscope or long straight edge). Tailstock guide ways parallel with movement of carriage 0.02 mm/m. No twist is permitted.

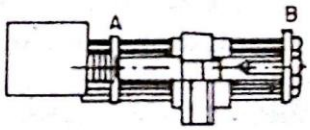

Fig. 12.1

Scanned by CamScanner

The error in level may be corrected by setting wedges at suitable points under the support feel or pads of the machine.

2. Straightness of Saddle in horizontal plane.

Measuring instruments. Cylindrical test mandril (600 mm long), dial indicator.

Procedure. The mandrel is held between centres. The dial indicator is mounted on the saddle. The spindle of the dial indicator is allowed to touch the mandrel. The saddle is then moved longitudinally along the length of the mandrel. Readings are taken at different places. *Permissible error.* 0.02 mm over length of mandrel.

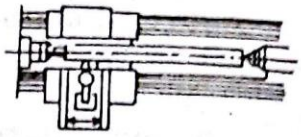

Fig. 12.2

3. Alignment of both the centres in the vertical plane

Measuring instruments. Cylindrical mandrel 600 mm long, dial gauge.

Procedure. The test mandrel is held between centres. The dial indicator is mounted on the saddle in vertical plane as shown in figure. Then the saddle along with the dial gauge is travelled longitudinally along the bed ways, over the entire length of the mandrel and the readings are taken at different places.

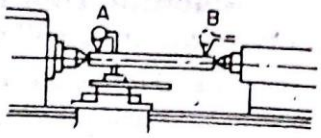

Fig. 12.3

Permissible error 0.02 mm over 600 mm length of mandrel (Tail stock centre is to lie higher only).

4. True running of taper socket in main spindle

Instruments required. Test mandrel with taper shank and 300 mm long cylindrical measuring part, dial gauge.

Procedure. The test mandrel is held with its taper shank in a head stock spindle socket. The dial gauge is mounted on the saddle. The dial gauge spindle is made to touch with the mandrel. The saddle is then travelled longitudinally along the bed ways and readings are taken at the points *A* and *B* as shown in figure.

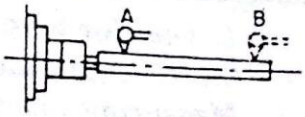

Fig. 12.4

Permissible error. Position A, 0.01 mm, position B 0.02 mm.

5. Parallelism of main spindle to saddle movement.

(*a*) In a vertical plane (*b*) In horizontal plane

Measuring instruments. Test mandrel with taper shank and 300 mm long cylindrical measuring part, dial gauge.

Procedure. The dial gauge is mounted on the saddle. The dial gauge spindle is made to touch the mandrel and the saddle is moved to and fro. It is checked in vertical as well as in horizontal plane.

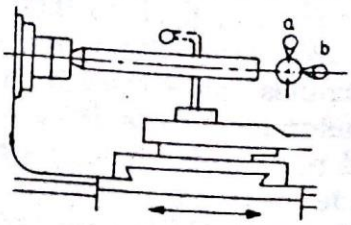

Fig. 12.5

Scanned by CamScanner

Permissible errors. (*a*) 0.02/300 mm mandrel rising towards free end only. (*b*) 0.02/300 mm mandrel inclined at free end towards tool pressure only.

6. Movement of upper slide parallel with main spindle in vertical plane

Measuring instruments. Test mandrel with taper shank and 300 mm long cylindrical measuring part, dial gauge.

Procedure. The test mandrel is fitted into the spindle and a dial gauge clamped to the upper slide. The slide is traversed along with the dial gauge plunger on the top of the stationary mandrel. Permissible error – 0.02 mm over the total movement of the slide.

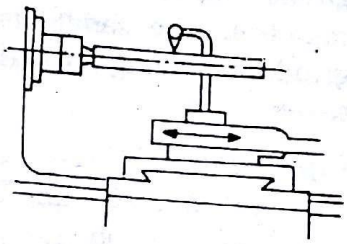

Fig. 12.6

7. True running of locating cylinder of main spindle

Measuring instrument. Dial gauge.

Procedure. The dial gauge is mounted on the bed, touching at a point on main spindle.

The main spindle is rotated by hand and readings of dial gauge are taken.

Permissible error – 0.01 mm.

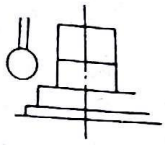

Fig. 12.7

8. True running of head stock centre

Measuring instrument. Dial gauge.

Procedure. The live centre is held in the tail stock spindle and it is rotated. Its trueness is checked by means of a dial gauge.

Permissible error – 0.01 mm

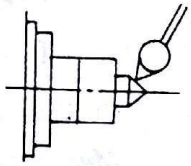

Fig. 12.8

9. Parallelism of tailstock sleeve to saddle movement

Measuring instrument. Dial indicator.

Procedure. Tailstock sleeve is fed outwards. The dial gauge is mounted on the saddle. Its spindle is touched to the sleeve at one end and then saddle is moved to and fro, it is checked in H.P. and V.P. also.

Permissible error. (*a*) 0.01/100 mm (Tailstock Sleeve inclined towards tool pressure only). (*b*) 0.01/100 mm (Tailstock Sleeve rising towards free end only).

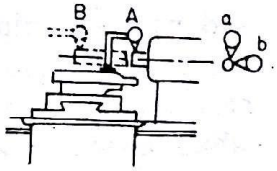

Fig. 12.9

10. Parallelism of tail stock sleeve taper socket to saddle movement (*a*) in V.P. (*b*) in H.P.

Scanned by CamScanner

Measuring instruments. The mandrel with taper shank and a cylindrical measuring part of 300 mm length, dial gauge.

Procedure. Test mandrel is held with its taper shank in a tail-stock sleeve taper socket. The dial gauge is mounted on spindle. The dial gauge spindle is made to touch with the mandrel. The saddle is then traversed longitudinally along the bed way and readings are taken.

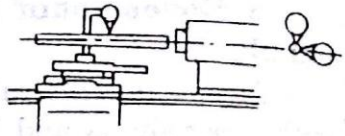

Fig. 12.10

Permissible error

(*a*) 0.03/300 mm (Mandrel rising towards free end only)

(*b*) 0.03/300 mm (mandrel inclined towards tool pressure only).

Alignment tests on milling machine knee type horizontal and vertical.

(1) **Flatness of work table**

(*a*) In longitudinal direction.

(*b*) In transverse direction

Measuring instruments. Spirit level.

Procedure. A spirit level is placed directly on the table at points about 25 to 30 cm apart, at *A*, *B*, *C* for longitudinal tests and *D*, *E* and *F* for the transverse test.

The readings are noted.

Permissible error :

Direction *A–B–C* , ± 0.04 mm

Direction *D–E–F*, ± 0.04 mm

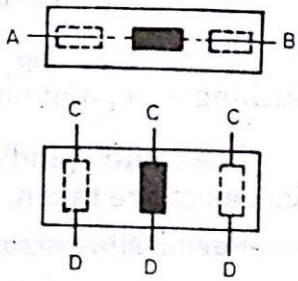

Fig. 12.11

(2) **Parallelism of the work table surface to the main spindle**

Measuring instruments : Dial indicator, test mandrel 300 mm long, spirit level.

Procedure. The table is adjusted in the horizontal plane by a spirit level and is then set in its mean position longitudinally. The mandrel is fixed in the spindle taper. A dial gauge is set on the machine table, and the feeler adjusted to touch the lower surface of the mandrel. The dial gauge readings at (A) and (B) are observed, the stand of the dial gauge being moved while the machine table remains stationary.

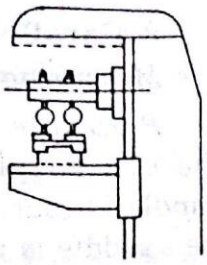

Fig. 12.11 (*a*)

Permissible error. 0.02/300 mm.

(3) **Parallelism of the clamping surface of the work table in its longitudinal motion**

Instruments. Dial gauge, straight edge.

Scanned by CamScanner

Procedure. A dial gauge is fixed to the spindle. The dial gauge spindle is adjusted to touch the table surface. The table is then moved in longitudinal direction and readings are noted. If the table surface is uneven it is necessary to place a straight edge on its surface and the dial gauge feeler is made to rest on the top surface of the straight edge.

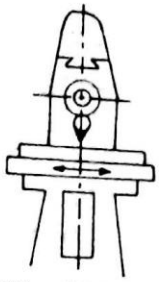

Fig. 12.12

Permissible error. 0.02 up to 500 mm length of traverse, 0.03 up to 1000 mm and 0.04 above 1000 mm length of traverse.

(4) **Parallelism of the cross (transverse) movement of the worktable to the main spindle**

(*a*) In a vertical plane

(*b*) In horizontal plane

Instruments. Dial gauge, test mandrel with taper shank.

Procedure. The work table is set in its mean position. The mandrel is held in the spindle. A dial gauge fixed to the table is adjusted so that its spindle touches the surface of the mandrel. The table is moved cross-wise and the error is measured in the vertical plane and also in the horizontal plane.

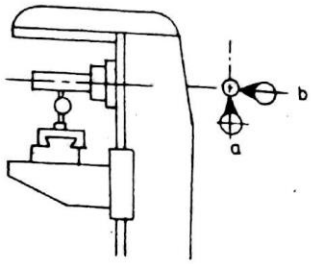

Fig. 12.13

Permissible error. 0.02 for the overall traverse movement of the worktable.

(5) **True running of internal taper of the main spindle.**

Instrument 300 mm long test mandrel, dial gauge.

Procedure. The test mandrel with its taper shank is held in the main spindle. Dial gauge is kept scanning the periphery of the mandrel. Spindle is rotated and dial gauge readings are noted at different points say *A* and *B* as shown.

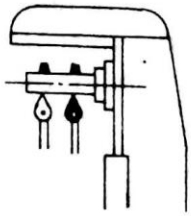

Fig. 12.14

Permissible error. Position A : 0.01 mm, Position B : 0.02 mm.

(6) **Squareness of the centre T-slot of worktable with main spindle**

Instruments. Dial gauge, special bracket.

Procedure. To check the perpendicularity of the locating slot and the axis of the main spindle. The table should be arranged in the middle position of its longitudinal movement, and a bracket with a tenon at least 150 mm long inserted in the locating slot, as shown in figure.

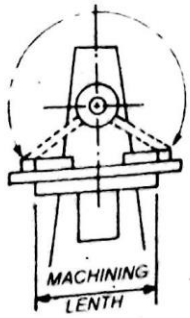

Fig. 12.15

Scanned by CamScanner

A dial gauge should be fixed in the spindle taper, the feeler being adjusted to touch the vertical face of the bracket. Observe the reading on the dial gauge when the bracket is near one end of the table, the swing over the dial gauge and move the bracket so that the corresponding readings can be taken near the other end of the table.

Permissible error. 0.025 mm in 300 mm.

(7) Parallelism of the T-slot with the longitudinal movement of the table

Instruments. Dial gauge, special bracket.

Procedure. The general parallelism of the T-slot with the longitudinal movement of the table is checked by using 150 mm long braked having a tenon which enters the slot. The dial gauge is fixed to the spindle taper and adjusted so that its feeder touches the upper surface of the bracket. The table is then moved longitudinally while the bracket is held stationary by the hand of the operator and dial gauge deviations from parallelism are noted down.

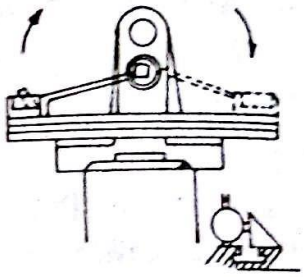

Fig. 12.16

Permissible error. 0.0125 mm in 300 mm.

(8) Parallelism between the main spindle and guiding surface of the overhanging arm

Instruments. Dial gauge, mandrel.

Procedure. The overhanging arm is clamped in its extreme extended position. The dial gauge is fixed to the arbor support.

The fecler of the dial gauge is adjusted to touch the top or ride of the test mandrel. The arbor support can then be moved along the overhanging arm and the deviations from paralielism observed on the dial gauge.

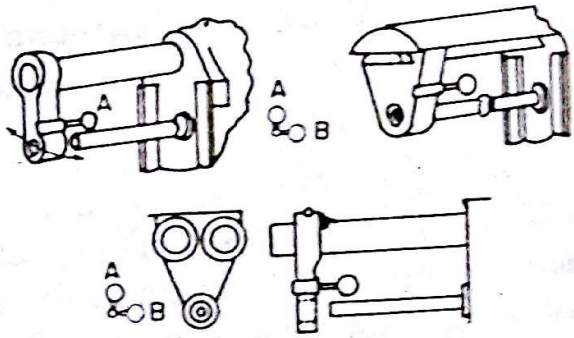

Fig. 12.17. Checking the overarm to the cutter spindle

Scanned by CamScanner

Alignment tests on pillar type drilling machine

Before carrying out the alignment tests, the machine is properly levelled in accordance with the manufacturers instructions.

The various tests performed on pillar drilling machine are :

Instruments. Straight edge, two gauge blocks; feeler gauges.

1. **Flatness of clamping surface of base.** The test is performed by placing a straight edge on two gauge blocks on the base plate in various positions and the error is noted down by inserting feeler gauges.

Permissible error. The error should not exceed 0.1/1000 mm clamping surface and the surface should be concave only.

2. **Flatness of clamping surface of table**

The test is performed in the same manner as test (1), but not on the label. The permissible error is also same.

Scanned by CamScanner

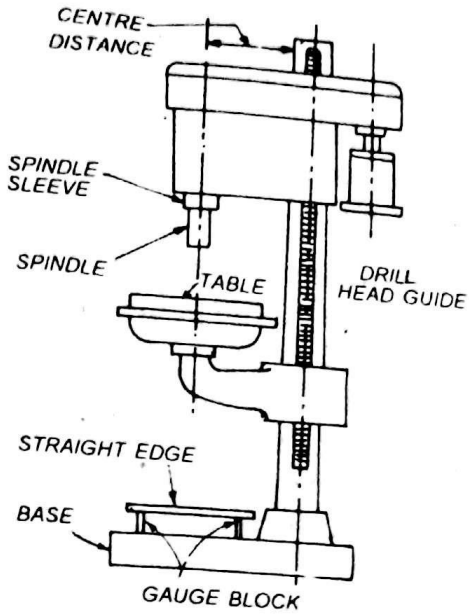

Fig. 12.23. Checking flatness of clamping surface of base

3. Perpendicularity of drill guide to the table base plate

Instruments. Frame level.

The squareness (perpendicularity) of drill head guide to the table is tested.

(*a*) In a vertical plane passing through the axes of both spindle and column, and

(*b*) In plane at 90° to the plane at (*a*).

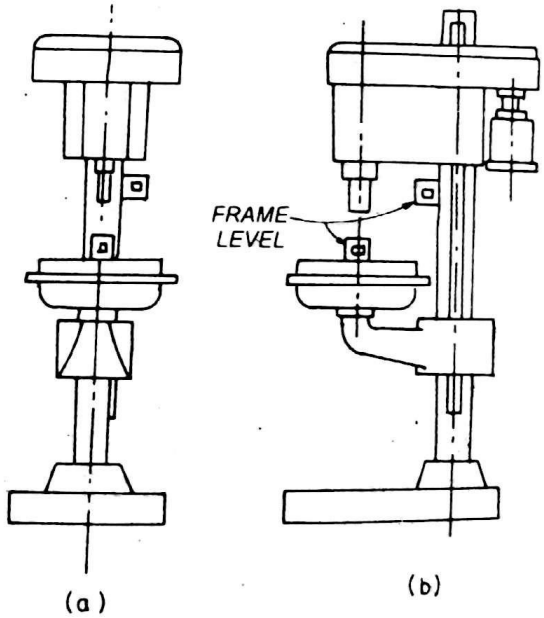

Fig. 12.24. Test for perpendicularity of drill head guide with table

The test is performed by placing the frame level (with graduations from 0.03 to 0.05 mm) on guide column and table and the error is noted by noting the difference between the readings of the two levels.

Scanned by CamScanner

Permissible error. The error should not exceed 0.25/1000 mm guide column for (*a*) and the guide column should be inclined at the upper end towards the front only, and 0.15/1000 mm for (*b*).

For testing the perpendicularity of drill guide to the base plate the test is similar as above, the only difference being that the frame level is to be placed on the base instead of a table.

4. Perpendicularity of spindle sleeve with base plate

This test is performed in both the planes as specified in test (3) and in the similar manner. The only difference is that the frame levels are to be placed on spindle sleeve and base plate.

Permissible error. The error (*i.e.*, the difference between the readings of the two levels) should not exceed 0.25/1000 mm for plane (*a*) and the sleeve should be inclined towards column only, and 0.15/100 mm for plane (*b*).

5. True running of spindle taper

Instruments. Test mandrel, dial gauge.

Procedure. The test mandrel is placed in the tapered hole of spindle and a dial indicator is fixed on the table and its feeler made to scan the mandrel. The spindle is rotated slowly and readings of indicator noted down.

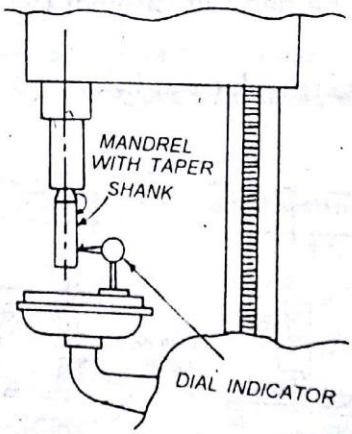

Fig. 12.25

Permissible error. The error should not exceed 0.03/100 mm for machines with taper up to Morse No. 2 and 0.04/300 mm for machines with taper larger than Morse No. 2.

6. Parallelism of the spindle axis with its vertical movements.

Instruments. Test mandrel, dial gauge.

Procedure. This test is performed into two planes (A) and (B) at right angles to each other. The test mandrel is fitted into the taper hole of the spindle and the dial gauge is fixed on the table with its feeler touching the

Scanned by CamScanner

mandrel. The spindle is adjusted in the middle position of its travel. The spindle is moved in upper and lower directions of the middle position with slow vertical feed mechanism and the readings of the dial gauge are noted down.

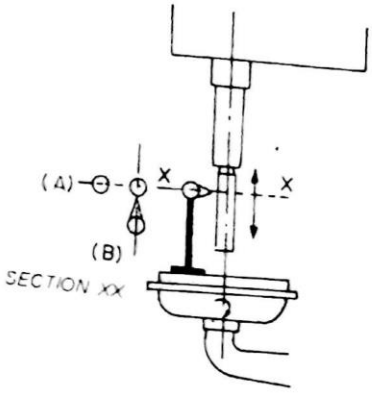

Fig. 12.26. For machines with tapper upto Morse No. 2. For machines with taper larger than Morse No. 2

Possible error. For plane (A) and (B) both 0.03/100 mm, 0.05/300 mm.

7. **Squareness of clamping surface of table to its axis.**

Instruments. Dial gauge.

Procedure. The dial indicator is mounted in the tapered hole of the spindle and its feeler is made to touches the surface of table. The table is then moved slowly and the readings of dial gauge noted down.

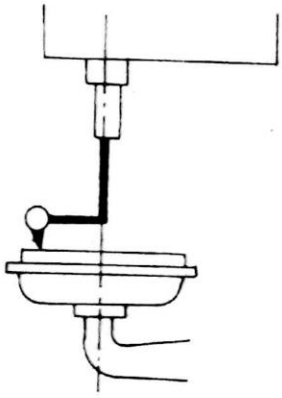

Fig. 12.27

Permissible error. The permissible error should not exceed 0.05/300 am diameter.

8. **Squareness of the spindle axis with table**

Instruments. Straight edge, dial gauge.

Procedure. This test is performed by placing the straight edge in positions *AA′* and *BB′*. The work table is arranged in the middle of its vertical travel. The dlal gauge is mounted in the tapered hole of the spindle and its feeler is made to touch the straight edge first at A and readings are taken. Then the spindle is rotated by 180° so that the feeler touches at point

Scanned by CamScanner

A′ and again the reading is taken. The difference of these two readings is the error in squareness of spindle axis with table. Similar readings are taken by placing the straight edge in position *BB′*.

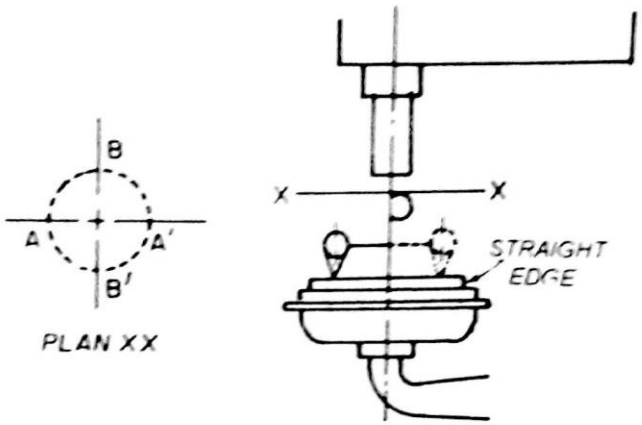

Fig. 12.28

Permissible error. The permissible errors are 0.08/300 mm with lower end of spindle inclined towards column only for set up *AA′* and 0.05/300 mm for set up *BB′*.

Scanned by CamScanner

Unit-4

Measurement Of Displacement And Strain

Resistive Transducers

The resistance of an electrical conductor varies according to the relation,

$$R = \frac{\rho L}{A}$$

where R= resistance in ohms, r= Resistivity of the material in ohm-cm, L= length of the conductor in cm, A= cross sectional area in cm2. Any method of varying one of the quantities involved may be the design criterion for the transducer. Following are some types:

Sliding contact devices:

Convert mechanical displacement input into either current or voltage output - Achieved by changing the effective length of the conductor - The slide or contactor maintains electrical contact with the element and the slide is a measure of the linear displacement of the slide - Such devices are used for sensing relatively large displacements.

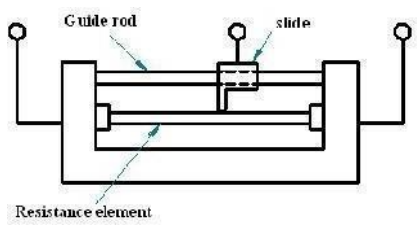

Sliding contact Resistive Transducer

Potentiometers:

The resistance elements may be formed by wrapping a resistance wire around a card as shown in fig. In this the effective resistance between either end of the resistance element and the slide is a measure of angular displacement of the slide.

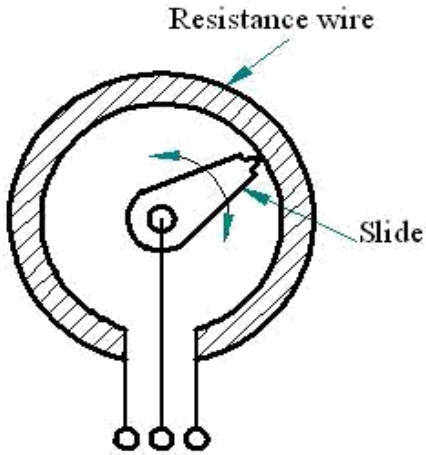

Angular motion

Angular motion potentiometer

- **Inductance** is the property in an electrical circuit where a change in the current flowing through that circuit induces an electromotive force (EMF) that opposes the change in current.
- In electrical circuits, any electric current *i* produces a magnetic field and hence generates a total magnetic flux Φ acting on the circuit.
- This magnetic flux, according to *Lenz's law* tends to oppose changes in the flux by generating a voltage (*a counter emf*) that tends to oppose the rate of change in the current.
- The ratio of the magnetic flux to the current is called the *self-inductance* which is usually simply referred to as the *inductance* of the circuit

Mutual Inductance:

When the varying flux field from one coil or circuit element induces an emf in a neighboring coil or circuit element, the effect is called Mutual Inductance.

Magnetic reluctance

Magnetic reluctance or magnetic resistance, is analogous to resistance in an electrical circuit.
In likeness to the way an electric field causes an electric current to follow the path of least resistance, a magnetic field causes magnetic flux to follow the path of least magnetic reluctance. Permeance is the reciprocal of reluctance

VARIABLE SELF INDUCTANCE TRASDUCER (Single Coil)

When a single coil is used as a transducer element, the mechanical input changes the permeance of the flux path generated by the coil, thereby changing its inductance.

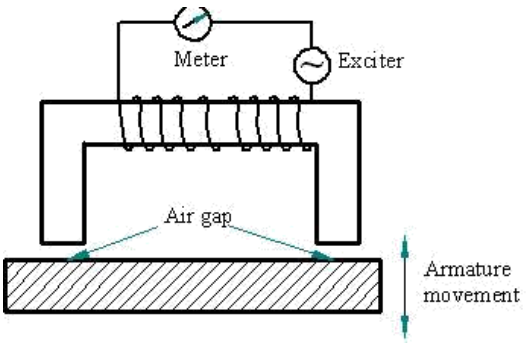

Single Coil

Self inductance arrangement

This change can be measured by a suitable circuit, indicating the value of the input. As shown in fig, the flux path may be changed by a change in the air gap.

The Two Coil arrangement, shown in fig, is a single coil with a center tap. Movement of the core alters the relative inductance of the two coils. These transducers are incorporated in inductive bridge circuit in which variation in inductance ratio between the two coils provides the output. This is used as a secondary transducer for pressure measurement.

Variable self inductance -Two Coil (Single coil with center tap)

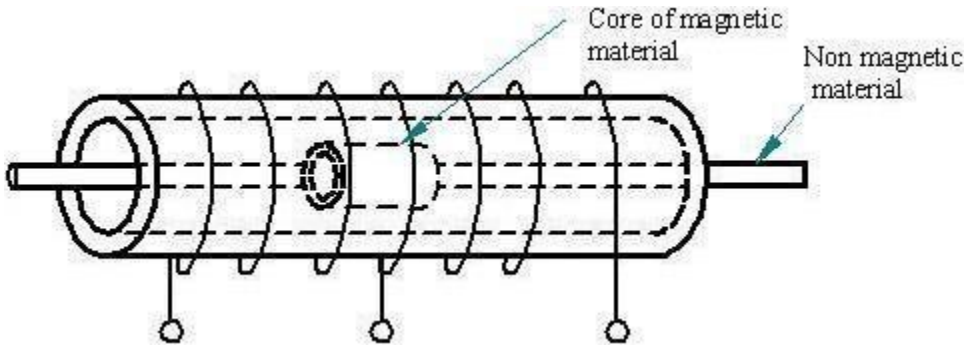

Variable Mutual inductance -Two Coil

- In this type, the flux from a power coil is coupled to a pickup coil, which supplies the output.
- Input information in the form of armature displacement, changes the coupling between the coils.
- The air gap between the core and the armature govern the degree of coupling.

Two Coil Mutual Inductance Transducer

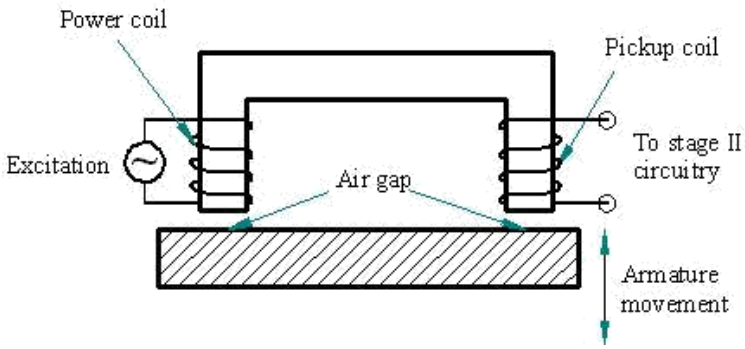

Note: Three Coil mutual inductance device (LVDT) is already discussed in Comparators Chapter.

A Variable reluctance Transducers are used for dynamic applications, where the flux lines supplied by a permanent magnet are cut by the turns of the coil. Some means of providing relative motion is included into the device.

- The fig shows a simple type of reluctance pickup consisting of a coil wound on a permanent magnetic core.
- Any variation of the permeance of the magnetic circuit causes a change in the flux, which is brought about by a serrated surface subjected to movement.
- As the flux field expands or collapses, a voltage is induced in the coil.

Variable Reluctance Transducer

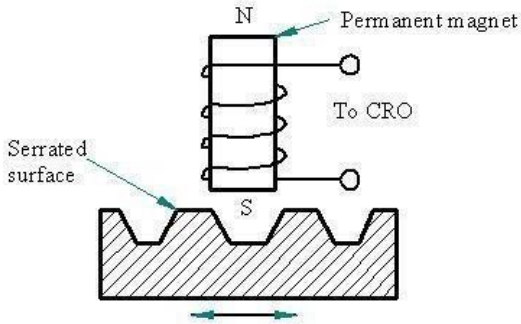

Capacitance Transducer

Generally it consists of two plates separated by a dielectric medium

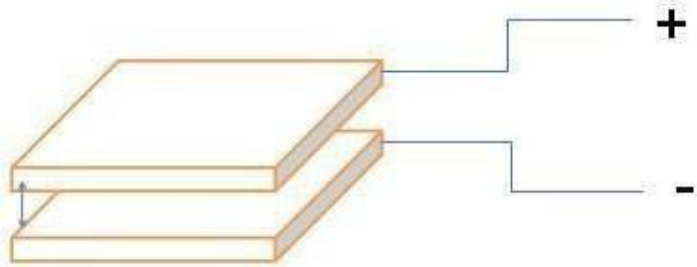

The principle of these type is that variations in capacitance are used to produce measurement of many physical phenomenon such as dynamic pressure, displacement, force, humidity, etc.

An equation for capacitance is $C \sqcup \frac{0.244KA(N\ 1)}{d}$ Farads

Where K= dielectric constant (for air K=1), A= area of one side of one plate, N= Number of plates, d= Separation of plate surfaces (cm)

The change in the capacitance may be brought about by three methods:

1. Changing the dielectric
2. Changing the area
3. Changing the distance between the plates
4. Fig shows a device used for the measurement of liquid level in a container.
5. The capacitance between the central electrode and the surrounding hollow tube varies with changing dielectric constant brought about by changing liquid level.
6. Thus the capacitance between the electrodes is a direct indication of the liquid level.
7. Variation in dielectric constant can also be utilized for measurements of thickness, density, etc.

Capacitance Pickup to measure liquid level (Changing dielectric constant)

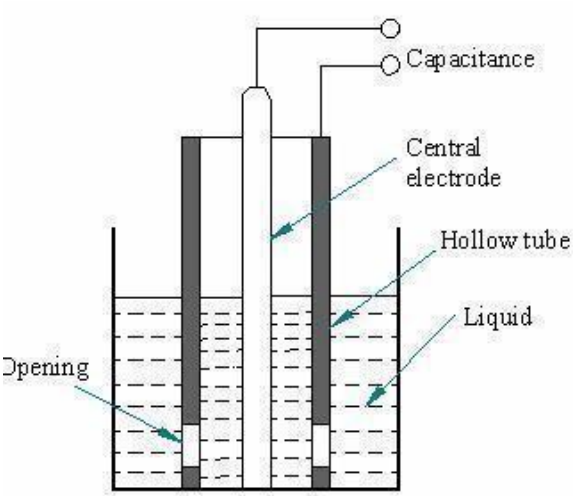

***capacitance** is the ability of a body to hold an electrical charge.
Capacitance is also a measure of the amount of electric charge stored for a given electric potential. A common form of charge storage device is a two-plate capacitor. If the charges on the plates are +Q and −Q, and V gives the voltage between the plates, then the capacitance is given by C=(Q/V)
The SI unit of capacitance is the farad; 1 farad = 1 coulomb per volt

Capacitive Transducer- Changing area:

- Capacitance changes depending on the change in effective area.
- This principle is used in the secondary transducing element of a *Torque meter*.
- This device uses a sleeve with serrations cut axially and a matching internal member with similar serrations as shown in fig.

- Torque carried by an elastic member causes a shift in the relative positions of the serrations, thereby changing the effective area. The resulting capacitance change may be calibrated to read the torque directly.

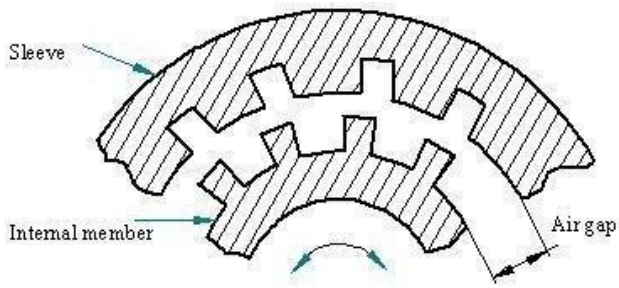

Torque Meter (Capacitive type)

Capacitive Transducer-Changing distance

The capacitance varies inversely as the distance between the plates. The fig shows a capacitive type pressure transducer where the pressure applied to the diaphragms changes the distance between the diaphragm & the fixed electrode which can be taken as a measure of pressure.

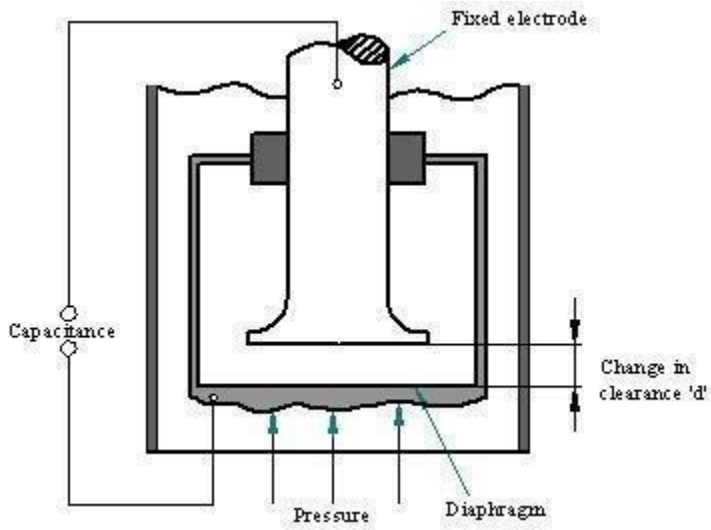

Capacitive type pressure pickup

Advantages of Capacitive Transducers

(1) Requires extremely small forces to operate and are highly sensitive
(2) They have good frequency response and hence useful for dynamic measurements.
(3) High resolution can be obtained.
(4) They have high input impedance & hence loading effects are minimum.
(5) These transducers can be used for applications where stray magnetic fields render the inductive transducers useless.

Disadvantages of Capacitive Transducers

(1) Metallic parts must be properly insulated and the frames must be earthed.
(2) They show nonlinear behaviour due to edge effects and guard rings must be used to eliminate this effect.
(3) They are sensitive to temperature affecting their performance.
(4) The instrumentation circuitry used with these transducers are complex.
(5) Capacitance of these transducers may change with presence of dust particles & moisture.

Piezoelectric Transducers :

- Certain materials can produce an electrical potential when subjected to mechanical strain or conversely, can change dimensions when subjected to voltage. This effect is called *'Piezoelectric effect'*.
- The fig shows a piezoelectric crystal placed between two plate electrodes and when a force 'F' is applied to the plates, a stress will be produced in the crystal and a corresponding deformation. The induced charge Q=d*F where 'd' is the piezoelectric constant
- The output voltage E=g*t*p where 't' is crystal thickness, 'p' is the impressed pressure & 'g' is called voltage sensitivity given by g=(d/e), e being the strain.
-

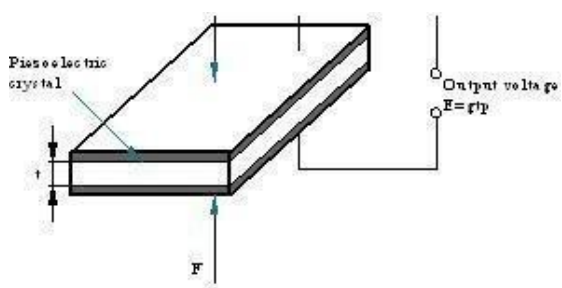

Piezoelectric effect

Piezoelectric materials

The common piezoelectric materials are quartz, Rochelle salt (Potassium sodium tartarate), ammonium dihydrogen phosphate and ordinary sugar. The desirable properties are stability, high output, insensitivity to temperature and humidity and ability to be formed into desired shape. Quartz is most suitable and is used in electronic oscillators. Its output is low but stable. Rochelle salt provides highest output, but requires protection from moisture in air & cannot be used above 45oC. Barium titanate is polycrystalline, thus it can be formed into a variety of sizes & shapes.

Piezoelectric transducers are used to measure surface roughness, strain, force & torque, Pressure, motion & noise. Desirable Properties of Piezoelectric Crystals Good stability, should be insensitive to temperature extremes, possess the ability to be formed to any desired shape.

Photoelectric Transducers:

A photoelectric transducer converts a light beam into a usable electric signal. As shown in the fig, light strikes the photo emissive cathode and releases electrons, which are attracted towards the anode, thereby producing an electric current in the circuit. The cathode & the anode are enclosed in a glass or quartz envelope, which is either evacuated or filled with an inert gas. The photo electric sensitivity is given by; I=s*f where I=Photoelectric current, s=sensitivity, f= illumination of the cathode. The response of the photoelectric tube to different wavelengths is influenced by

(i) The transmission characteristics of the glass tube envelope and
(ii) Photo emissive characteristics of the cathode material.

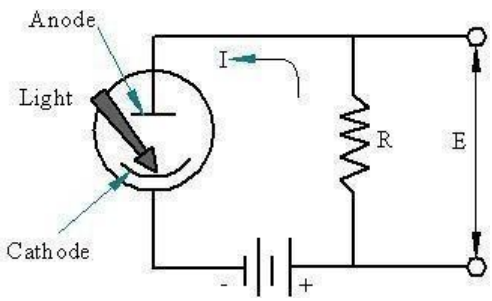

Photoelectric tubes are useful for counting purposes through periodic interruption of a light source

Photoconductive Transducers:

The principle of these transducers is when light strikes a semiconductor material, its resistance decreases, there by producing an increase in the current. The fig shows a cadmium sulphide semiconductor material to which a voltage is applied and when light strikes, an increase in current is indicated by the meter.

Photoconductive transducers are used to measure radiation at all wavelengths. But extreme experimental difficulties are encountered when operating with long wavelength radiations.

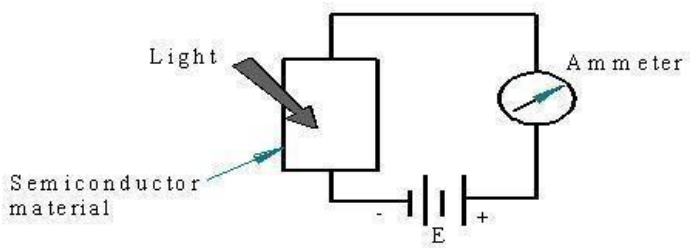

Photoconductive Transducer

The principle of *photovoltaic cell* is illustrated in the fig. It consists of a bas metal plate, a semiconductor material, and a thin transparent metal layer. When light strikes the transparent metal layer and the semiconductor material, a voltage is generated. This voltage depends on the load resistance R. The open circuit voltage is a logarithmic function, but linear behavior may be obtained by decreasing the load resistance.

- It is used in light exposure meter for photographic work.
-

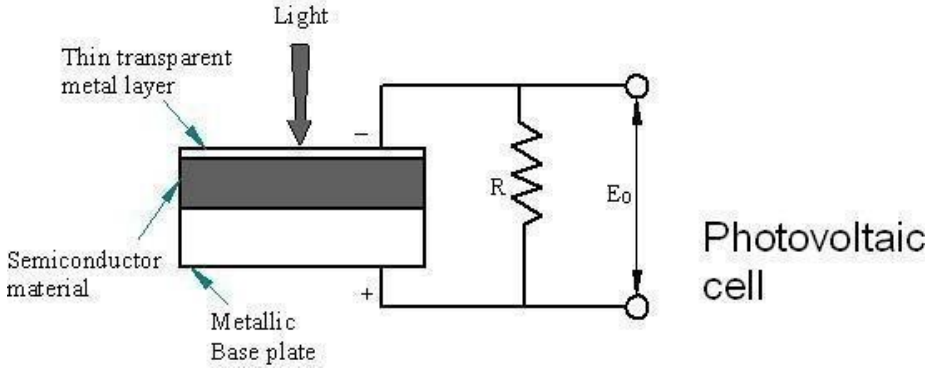

Ionization Transducers

- Ionization Transducers consist of a glass or quartz envelope with two electrodes A & B and filled with a gas or mixture of gases at low pressures.
- The radio frequency (RF) generator impresses a field to ionize the gas inside the tube.
- As a result of the RF field, a glow discharge is created in the gas, and the two electrodes A & B detect a potential difference in the gas plasma.
- It depends on the electrode spacing and the capacitive coupling between the RF plates and the gas
- When the tube is at the central position between the RF plates, the potentials on the electrodes will be the same, but when the tube is displaced from its central position, a D.C potential will be created.
- Thus ionization transducer is an useful device for measuring displacement.

Applications:

Pressure, acceleration & humidity measurements. They can sense capacitance changes of 10-15 farads or movements of 2.5x10-5 mm can be accurately measured with a linearity better than 1%.

Ionization Transducer

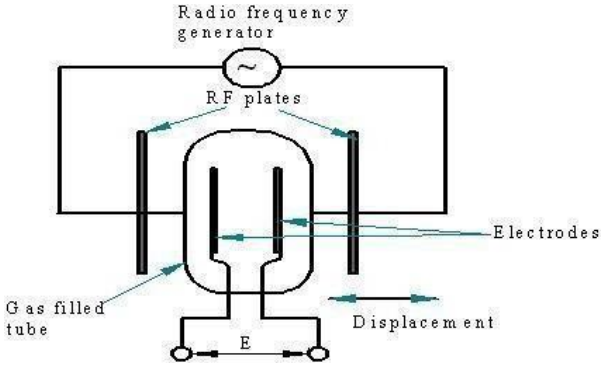

- The fig shows the schematic diagram of an *Electronic transducer* element which is basically an electronic tube in which some of the elements are movable.
- Here, the plates are mounted on an arm which extends through a flexible diaphragm in the end of the tube.
- A mechanical movement applied to the external end of the rod is transferred to the plates within the tube thereby changing the characteristics of the tube.

Applications:

Electronic transducer element is used as surface roughness

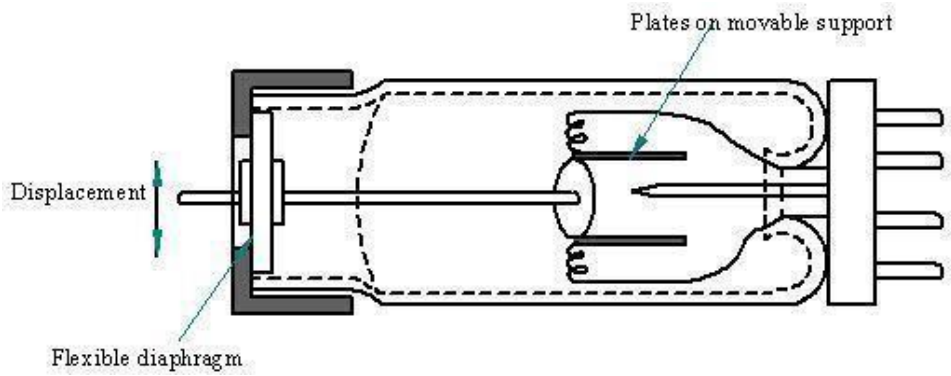

Electrokinetic Transducer

- The Electrokinetic phenomenon is also referred to as 'Streaming Potential' which occurs when a polar liquid such as water, Methanol, or acetonitrile (CH3CN) is forced through a porous disc.
- When the liquid flows through the pores, a voltage is generated which is in phase with and directly proportional to the pressure across the faces of the disc.
- When direction of flow is reversed, the polarity of the signal is also reversed.

Electrokinetic Transducer

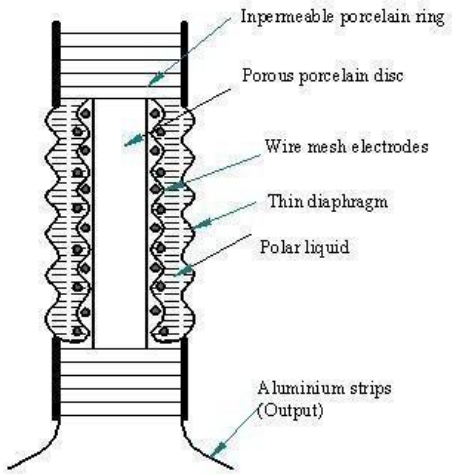

An unlimited supply of liquid is required on the upstream to measure static differential pressure with this type of pickup. Since this is impractical, finite amount of liquid is constrained within the electrokinetic cell. i.e. the device is used for dynamic rather than static pressure measurements.

- *Fig. shows a typical electrokinetic cell. It consists of a porous porcelain disc fitted into the center of an impermeable porcelain ring.*
- *The diaphragms are tightly sealed on either side to retain the polar liquid, which fills the space between the diaphragms.*
- *A wire mesh electrode is mounted on either side of the porous disc, with electrical connections via the aluminium strips.*
- *The whole assembly is fitted in a suitable housing.*

Applications: Measurement of small dynamic displacements, pressure & acceleration. **Limitations**: Can not be used for measurement of static quantities.

MEASUREMENT OF SPEDD, ACCLERATION AND VIBRATION

Introduction

Speed is a rate variable defined as the time-rate of motion. Common forms and units of speed measurement include: linear speed expressed in meters per second (m/s), and the angular speed of a rotating machine usually expressed in radians per second (rad/s) or revolutions per minute (rpm).
Measurement of rotational speed has acquired prominence compared to the measurement of linear speed.

Angular measurements are made with a device called tachometer. The dictionary definitions of a tachometer are:

* "an instrument used to measure angular velocity as of shaft, either by registering the number of rotations during the period of contact, or by indicating directly the number of rotations per minutes"

* "an instrument which either continuously indicates the value of rotary speed, or continuously displays a reading of average speed over rapidly operated short intervals of time"

Tachometers may be broadly classified into two categories:

- Mechanical tachometers and
- Electrical tachometers.

Mechanical tachometers:

These tachometers employ only mechanical parts and mechanical movements for the measurement of speed.

1. Revolution counter and timer:

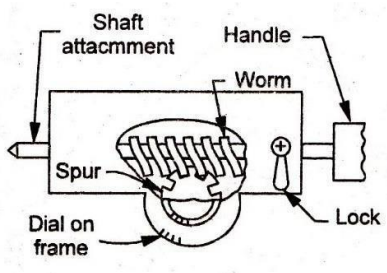

Revolution counter

The revolution counter, sometimes called a speed counter, consists of a worm gear which is also the shaft attachment and is driven by the speed source. The worm drives the spur gear which in turn actuates the pointer on a calibrated dial. The pointer indicates the number of revolutions turned by the input shaft in a certain length of time. The unit requires a separate timer to measure the time interval. The revolution counter, thus, gives an average rotational speed rather than an instantaneous rotational speed. Such speed counters are limited to low speed engines which permit reading the counter at definite time intervals. A properly designed and manufactured revolution counter would give a satisfactory speed measure upto 2000-3000 rpm.

2. Tachoscope:

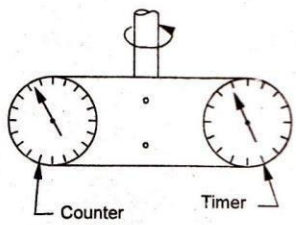

Tachoscope

The difficulty of starting a counter and a watch at exactly the same time led to the development of tachoscope, which consists of a revolution counter incorporating a built-in timing device. The two components are integrally mounted, and start simultaneously when the contact point is pressed against the rotating shaft. The instrument runs until the contact point is disengaged from the shaft. The rotational speed is computed from the readings of the counter and timer. Tachoscopes have been used to measure speeds upto 5000 rpm.

3. Hand speed indicator:

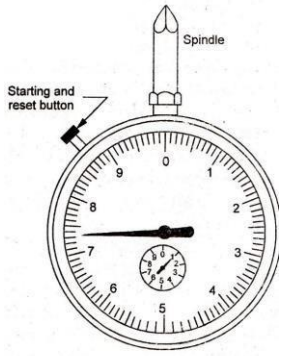

Hand speed indicator

The indicator has an integral stop watch and counter with automatic disconnect. The spindle operates when brought in contact with the shaft, but the counter does not function until the start and wind button is pressed to start the watch and engage the automatic clutch. Depressing of the starting button also serves to wind the starting watch. After a fixed time-interval (usually 3 or 6 seconds), the revolution counter automatically gets disengaged. The instrument indicates the average speed over the short interval, and the dial is designed to indicate the rotational speed directly in rpm. These speed measuring units have an accuracy of about 1% of the full scale and have been used for speeds within the range 20,000 to 30,000 rpm.

4. Slipping clutch tachometer:

The rotating shaft drives an indicating shaft through at slipping clutch. A pointer attached to the indicator shaft moves over a calibrated scale against the torque of a spring. The pointer position gives a measure of the shaft speed.

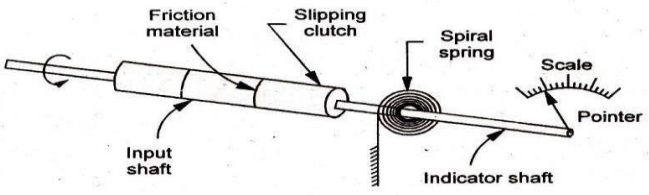

Slipping clutch tachometer

5. Centrifugal force tachometers:

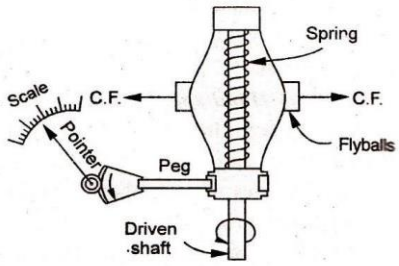

Centrifugal tachometer

The device operates on the principle that centrifugal force is proportional to the speed of rotation. Two flyballs (small weights) are arranged about a central spindle. Centrifugal force developed by these rotating balls works to compress the spring as a function of rotational speed. A grooved collar or sleeve attached to the free end of the spring then slides on the spindle and its position can be calibrated in terms of the shaft speed. Through a series of linkages, the motion of the sleeve is usually amplified and communicated to the pointer of the instrument to indicate speed. Certain attachments can be mounted onto the spindle to use these tachometers for the measurement of linear speed.

6. Vibrating reed tachometer:

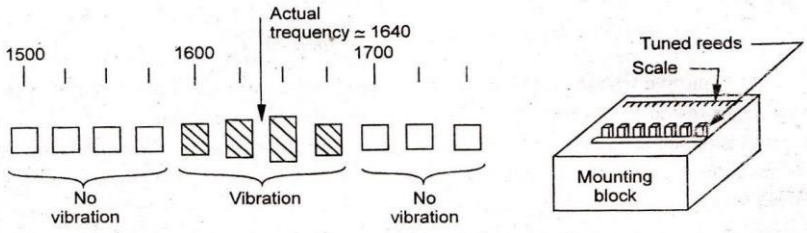

Vibrating reed tachometer

Tachometers of the vibrating reed type utilize the fact that speed and vibration in a body are interrelated. The instrument consists of a set of vertical reeds, each having its own natural frequency of vibration. The reeds are lined up in order of their natural frequency and are fastened to a base plate at one end, with the other end free to vibrate. When the tachometer base plate is placed in mechanical contact with the frame of a rotating machine, a reed tuned to resonance with the machine vibrations responds most frequently. The indicated reed vibration frequency can be calibrated to indicate the speed of the rotating machine.

(i) Indicating unit containing a voltage source, a capacitor, milliammeter and a calibrating circuit. When the switch is closed in one direction, the capacitor gets charged from d-c supply and the current starts flowing through the ammeter. When the spindle operates the reversing switch to close it in opposite direction, capacitor discharges through the ammeter with the current flow direction remaining the same. The instrument is so designed that the indicator responds to the average current. Thus, the indications are proportional to the rate of reversal of contacts, which in turn are proportional to speed of the shaft. The meter scale is graduated to read in rpm rather than in milliamperes. The tachometer is used within the range 200 - 10000 rpm.

1. Tachogenerators: These tachometers employ small magnet type d.c or a.c generators which translate the rotational speeds into d.c. or a.c voltage signal. The operating principle of such tachometers is illustrated in Fig. Relative perpendicular motion between a magnetic field and conductor results in voltage generation in the conductor.

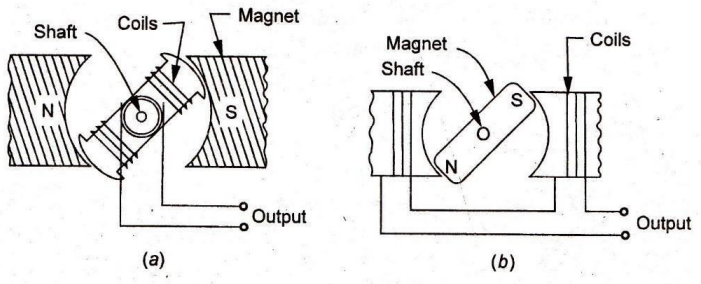

(a) D.C. tachometer *(b) A.C. tachometer*

(i) D. C. tachometergenerator: This is an accurately made dc. generator with a permanent magnet of horse-shoe type. With rotation of the shaft, a pulsating dc. Voltage proportional to the shaft speed is produced, and measured with the help of a moving coil voltmeter having uniform scale and calibrated directly in terms of speed. The tachometer is sensitive to the direction of rotation and thus can be used to indicate this direction by the use of an indicator with its zero point at mid-scale. For greater accuracy, air gap of the magnetic paths must be maintained as uniform as possible. Further, the instrument requires some form of commutation which presents the problem of brush maintenance.

(ii) A.C. tachometer generator: The unit embodies a stator surrounding a rotating permanent magnet. The stator consists of a multiple pole piece (generally four), and the permanent magnet is installed in the shaft whose speed is being measured. When the magnet rotates, an a.c. voltage is induced in the stator coil. The output voltage is rectified and measured with a permanent magnet moving coil instrument. The instrument can also be used to measure a difference in speed of two sources by differentially connecting the stator coils.

Tachogenerators have been successfully employed for continuous measurement of speeds upto 500 rpm with an accuracy of ±1%.

2. Contactless electrical tachometers:

Tachometers of this type produce pulse from a rotating shaft without any physical contact between the speed transducer and the shaft. This aspect has the distinct advantage in that no load is applied to the machine.

(i) Inductive pick-up tachometer: The unit consists of a small permanent magnet with a coil round it. This magnetic pick up is placed near a metallic toothed rotor whose speed is to be measured. As the shaft rotates, the teeth pass in front of the pick-up and produce a change in the reluctance of the magnetic circuit. The field expands or collapses and a voltage is induced in the coil. The frequency of the pulses depends upon the number of teeth on the wheel and its speed of rotation. Since the number of teeth is known, the speed of rotation can be determined by measuring the pulse frequency. To accomplish this task, pulse is amplified and squared, and fed into a counter of frequency measuring unit.

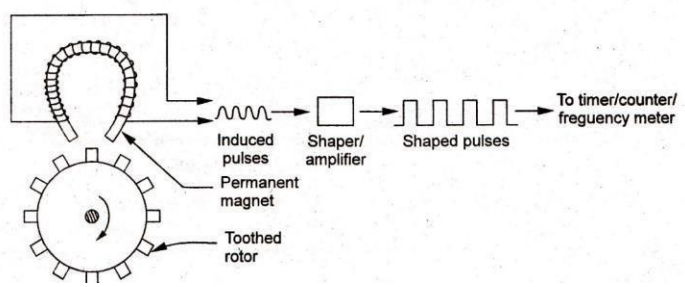

$$\text{Speed } N = \frac{\text{pulses per second}}{\text{number of teeth}}$$

$$N = \frac{P}{T} \text{ rps} = \frac{P}{T} \times 60 \text{ rpm}$$

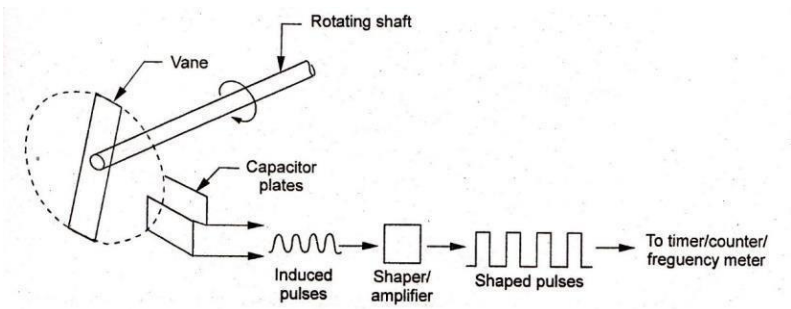

If the rotor has 60 teeth, and if the counter counts the pulses in one second, then me counter will directly display the speed in revolutions per minute.

(ii) Capacitive type pick-up tachometer:

The device consists of a vane attached to one end of the rotating machine shaft. When the shaft rotates between the fixed capacitive plates, there occurs a change in the capacitance. The capacitor forms a part of an oscillator tank so that number of frequency changes per unit of time is a measure of the shaft speed. The pulses thus produced are amplified, and squared, and may then be fed to frequency measuring unit or to a digital counter so as to provide a digital analog of the shaft rotation.

(iii) Photo-electric tachometer: These pick-ups utilize a rotating shaft to intercept a beam of light falling on a photo-electric or photo conductive cell. The shalt has an intermittent reflecting (white) and non- reflecting (black) surface. When a bean) of light hits the reflecting surface on the rotating shaft, light pulses are obtained and the reflected light is focused onto the photo-electric cell. The frequency of light pulses is proportional to the shaft speed, and so will be the frequency of electrical output pulses from the photo-electric cell.

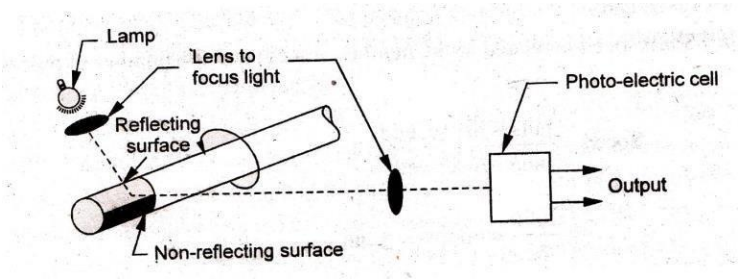

(i) Stroboscope:

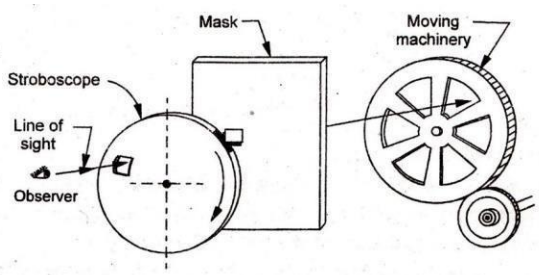

Mechanical disk-type stroboscope

The stroboscope utilises the phenomenon of vision when an object is viewed intermittently. The human sense of vision is so slow to react to light stimuli that it is unable to separate two different light impulses reaching the eye within a very short Period of time (less than 0.1second). A succession of impulses following one another at brief intervals are observed by the eye as a continuous unbroken sequence. A mechanical disk type stroboscope consists essentially of a whirling disk attached to motor whose speed can be varied and measured. A reference mark on the rotating shaft on the shaft appears to be stationary. For this condition, the shaft speed equals that of rotating disk, or some even multiple of this speed and is given by:

- **Vibration amplitude and acceleration**

Vibration refers to the repeated cyclic oscillations of a system; the oscillatory motions may be simple harmonic (sinusoidal) or complex (non-sinusoidal). The oscillations are caused when acceleration is applied to the machine alternately in two directions

The excessive vibration level in a machine is an indication of the following troubles it can cause:

* Catastrophic failure as a result of stress caused by induced resonance and fatigue

* Excessive wear because of failure to compensate for vibration to which a product is subjected or which is created by the product

* Faulty production

* Incorrect operation of precision equipment and machinery because of failure to compensate for vibration and shock encountered in use.

human discomfort leading to adverse effects such as motion sickness, breathing and speech disturbance, loss of touch of sensitivity etc.

Characteristics and units of vibrations: Vibration is generally characterized by

(i) The frequency in Hz, or

(ii) The amplitude of the measured parameter which may be displacement, velocity or

acceleration. Further, the units of vibration depend on the vibration parameter as follows:

(a) Displacement, measured in m, (b) velocity, measured in m/s and (c) acceleration, measured in m/s^2.

Vibrating motions may be simple harmonic or complex. Assuming it to be simple harmonic,

$$\text{displacement } x = A \sin \omega t$$

$$\text{velocity } v = \frac{dx}{dt} = A\,\omega \cos \omega t$$

$$\text{acceleration } a = \frac{dv}{dt} = -A\,\omega^2 \sin \omega t$$

where $\omega = 2\pi f$ rad/s and f is the frequency of vibration in Hz. Obviously, the amplitude of the different parameters are :

$$\text{displacement amplitude} = A$$
$$\text{velocity amplitude} = A\,\omega$$
$$\text{acceleration amplitude} = -A\,\omega^2$$

The measured amplitude is normally expressed in decibels with reference to a fixed value. Let A_1 be the measured amplitude and A_0 be the reference amplitude. Then the vibration level expressed in decibels is

$$\text{vibration level} = 20 \log_{10} \frac{A_1}{A_0} \text{ dB}$$

The internationalyy accepted reference values are:

(a) for velocity, the reference value is 10^{-3} m/s, and

(b) for acceleration, the reference value is 10^{-5} m/s^2

Measurement of acceleration:

There are two types of accelerometers generally used for measurement of acceleration:

(i) Piezo-eletric type, and (ii) seismic type.

(i)Piezo-electric accelerometer: The unit is perhaps the simplest and most commonly used transducer employed for measuring acceleration. The sensor consists of a piezo-electric crystal sandwitched, between two electrodes and has a mass placed on it. The unit is fastened to the base whose acceleration characteristics are to be obtained. The can threaded to the base acts as a 'spring and squeezes the mass against the crystal. Mass exerts a force on the crystal and a certain output voltage is generated. If the base is now accelerated downward, inertial reaction force on the base acts upward against the top of the can. This relieves stress on the crystal. From Newton's second law

$$\text{force} = \text{mass} \times \text{acceleration}$$

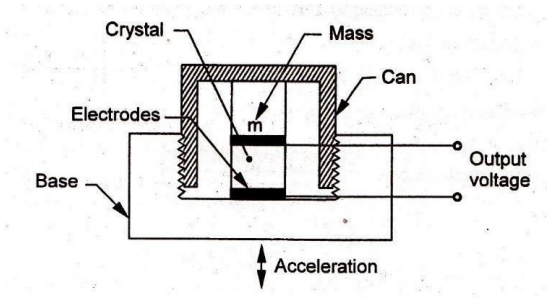

Advantages and limitations

* Rugged and inexpensive device

* High output impedance ’

* High frequency response from 010 Hz to 50 kHz

* High sensitivity varies from 10 to 100 mv/g where g = 9.807 m/s^2

* Capability to measure acceleration from a fraction of g to thousands of g

* Somewhat sensitive to changes in temperature

* Subject to hysteresis errors.

Displacement sensing (seismic) accelerometer: In a seismic accelerometer the displacement of a mass resulting from an applied forced is measured and correlated to the acceleration. Fig shows the schematics of a common spring mass damper system which accomplishes this task. The mass is supported by a spring and damper is connected to the housing frame. The frame is rigidly attached to the machine whose acceleration characteristics are to be determined. When an acceleration is imparted by the machine to the housing frame, the mass moves relative to the frame, and this relative displacement between the mass and frame is sensed and indicated by an electrical displacement transducer.

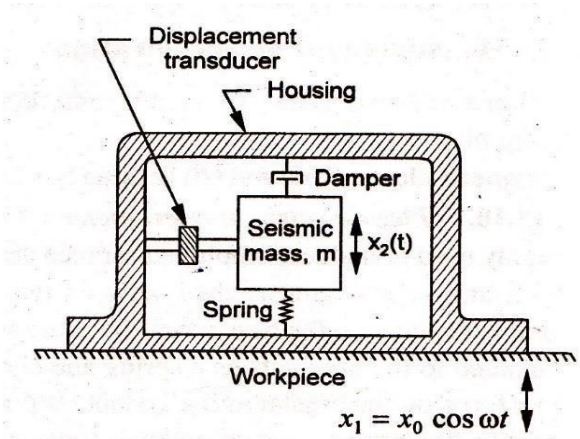

Seismic accelerometer

Theory of seismic accelerometer **:** The spring-mass-damper system of the seismic accelerometer can be represented by an equilibrium equation obtained through Newton's second law :

$$m\frac{d^2x_2}{dt^2} + c\frac{dx_2}{dt} + kx_2 = c\frac{dx_1}{dt} + kx_1 \qquad ...(12.14)$$

where the damping force has been assumed to be proportional to the velocity. For a simple harmonic vibratory motion applied to the housing frame,

$$\text{displacement } x_1 = A\cos\omega t$$

$$\text{velocity } v = \frac{dx_1}{dt} = -\omega\, A\sin\omega t$$

$$\text{acceleration } a = \frac{dv}{dt} = -\omega^2\, A\cos\omega t \qquad ...(12.15)$$

where $\omega = 2\pi f$ rad/s and f is the frequency of vibration in Hz. From these expressions for the instantaneous values of different parameters we have :

$$\text{displacement amplitude} = A$$

$$\text{velocity amplitude} = \omega A$$

$$\text{acceleration amplitude} = \omega^2 A \qquad ..(12.16)$$

A solution to equation 12.14 would show that the relative displacement $(x_2 - x_1)$ between the mass and housing is given by :

$$(x_2 - x_1) = \frac{\omega^2 A}{\omega_n^2\left[\left\{1-\left(\frac{\omega}{\omega_n}\right)^2\right\}^2 + \left\{2\left(\frac{c}{c_c}\right)\left(\frac{\omega}{\omega_n}\right)\right\}^2\right]^{\frac{1}{2}}} \qquad ...(12.17)$$

where the natural frequency ω_n and critical damping coefficient c_c are given by

$$\omega_n = \sqrt{\frac{k}{m}} \;\; ; \;\; c_c = 2\sqrt{mk} \qquad ...(12.18)$$

The seismic instrument may be used either for displacement measurement by proper selection of the mass-spring-damper combination. Since velocity is rate of change of displacement and acceleration is rate of change of velocity, each quantity can be obtained by differentiating or integrating one of the quantity which has been measured. Since the process of integration is more common and easily done in electrical systems, it is a common practice to measure acceleration and then deduce the velocity or displacement by successive integration.

Displacement measurement **:** Let the frequency (ω) applied to the base be much higher than the natural frequency (ω_n), then the term $\{2(c/c_c)(\omega/\omega_n)\}^2$ can be neglected in comparison with $\left[(\omega/\omega_n)^2\right]^2$ and the approximate expression for $(x_2 - x_1)$ becomes :

$$(x_2 - x_1) = \frac{\omega^2 A}{\omega_n^2 \left[\left\{\left(\frac{\omega}{\omega_n}\right)^2\right\}^2\right]^{\frac{1}{2}}} = \frac{\omega^2 A}{\omega_n^2 \left(\frac{\omega}{\omega_n}\right)^2} = A. \qquad ...(12.19)$$

Thus the output is very nearly equal to the input amplitude A. This relation is valid for ω/ω_n ratios greater than 2. Thus for vibration pick-ups, the system is to be operated at frequencies higher than the natural frequency. The task is accomplished by keeping the natural frequency $\left(\omega_n = \sqrt{k/m}\right)$ low by employing soft spring and large mass.

Acceleration measurement **:** Let the input frequency ω be much smaller than the natural frequency ω_n, then

$$(x_2 - x_1) = \frac{\omega^2 A}{\omega_n^2} = \frac{1}{\omega_n^2} \times \text{maximum acceleration} \qquad ...(12.20)$$

and this relation remains valid for $\omega/\omega_n \leq 0.4$ .This if the pick-up is to be used for acceleration measurement, ω_n should be large, *i.e.*, the system should have a stiff spring and small mass. That would enable to operate the system over a wide range of frequencies and still keep the response linear.

In a ***strain gauge accelerometer*** (Fig. 12.25), the sensing mass is mounted on a cantilever beam. A viscous liquid fills the housing and provides the necessary damping. Two strain gauges are attached to the beam, one on each and these sense the strain in the

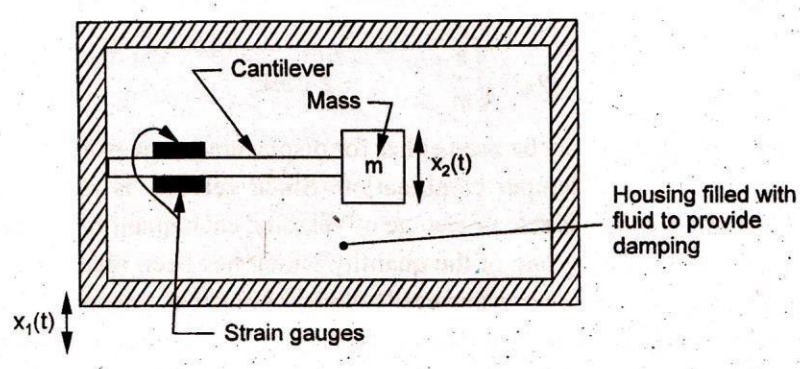

Fig. 12.25 Strain gauge accelerometer

beam which results from vibratory displacement. The leads from the strain gauges are taken to a wheatstone bridge whose output indicates the relative displacement between the mass and the housing form.

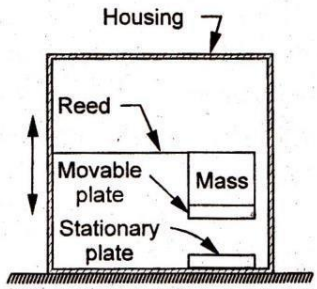

Fig. 12.26 (a)
Capacitance vibration sensor

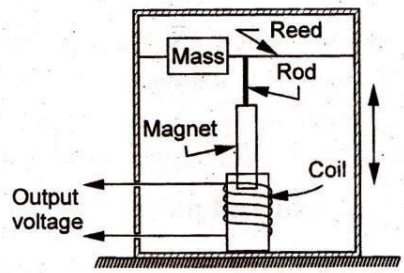

Fig. 12.26 (b)
Inductive vibration sensor

Quite often, vibration amplitudes are translated into an inductance and capacitance change of the system. Magnitude of the output voltage or capacitance is then taken as a measure of the amplitude of vibration. The schematics of such vibration pick-ups are shown in Fig. 12.26 which are self-explanatory.

A suitable estimate of frequency and amplitude of vibrations in light systems (where it is not possible to attach an electrical transducer) is best made by using either a stroboscope or a reed vibrometer.

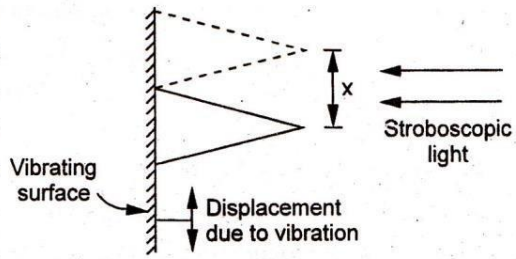

Fig. 12.27 Stroboscopic method for vibration measurement

A fixed pointer is attached to the vibrating surface (Fig. 12.27), flashes from a stroboscope are directed onto the pointer and frequency of light flashes is adjusted until a

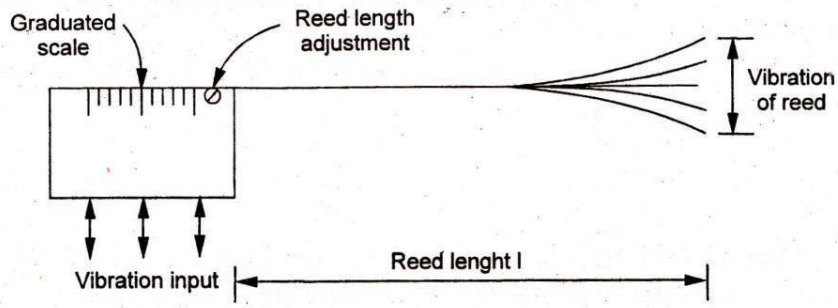

stationary image or a slowly moving image of the pointer is obtained. The flash frequency is then related to the amplitude or frequency of vibration. The stroboscope method is quite suitable for small-amplitude vibrations having an upper frequency range of about 500 Hz.

The reed vibrometer employs a reed which is mounted onto the vibrating structure or mechanism. The length of the reed is adjusted so that its natural frequency is equal to the frequency of the vibrating surface. Under this resonance condition, the reed vibrates with maximum amplitude. The reed length is calibrated directly in frequency units ; typical range of frequency measurement is 5 Hz to 10000 Hz.

**********THE END**********

Strain Gauge

•The strain gauge is a passive, resistive transducer which converts the mechanical elongation and compression into a resistance change.

•This change in resistance takes place due to variation in length and cross sectional area of the gauge wire, when an external force acts on it.

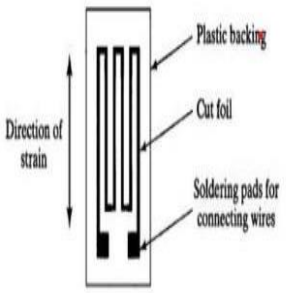

FIGURE 8.2

Foil strain gage.

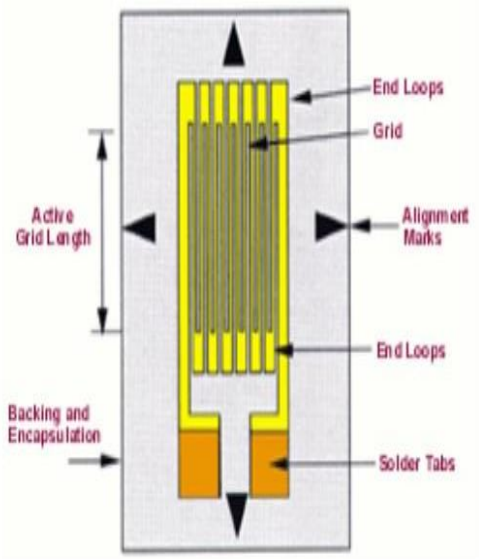

Gauge factor

•The sensitivity of a strain gauge is described in terms of its characteristics called, gauge factor G.

•Gauge factor is defined as the unit change in resistance per unit change in length.

$$G = \frac{\Delta R/R}{\Delta l/l} = \frac{\Delta R/R}{S}$$

Types of Strain Gauge

•Unbondedstrain gauge.

.Bonded strain gauge

•Linear strain gauge

•Rosette •

Torque gauge

•Helical gauge

Unbonded strain gauge

•This gauge consists of a wire stretched between two point in an insulating medium such as air.

•The wires may be made of various copper, nickel, chromium nickel or nickel iron alloys.

•The element is connected via a rod to diaphragm which is used for sensing the pressure. The wire is tensioned to avoid buckling when they experience the compressive force.

•Resistance wires are of equal length.

The unbounded meter wire gauges are used exclusively in transducer applications that employ preloaded resistance wire connected in Wheatstone bridge as shown in fig.

•At initial preload the strain and resistance of the four arms are nominally equal with the resultant output voltage of the bridge equal to zero.

•Application of pressure produces a small displacement, the displacement increases the tension in two wires and decreases it in the other two thereby increase the resistance of two wires which are in tension and decreasing the resistance of the remaining two wire.

•This causes an unbalance of the bridge producing an output voltage which is proportional to the input displacement and hence to the applied pressure.

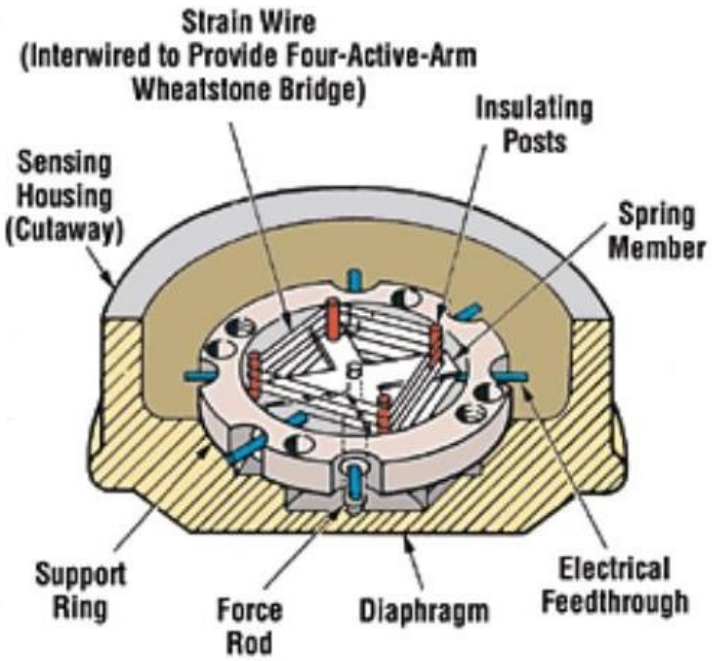

Unbonded strain gauge

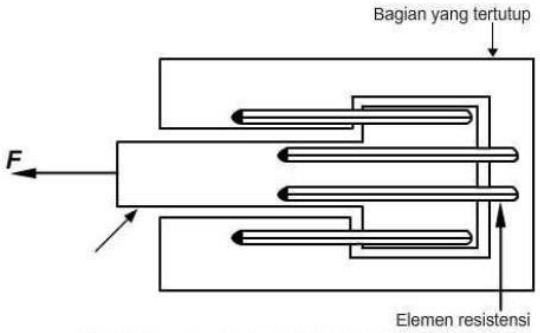

Quarter-bridge strain gauge circuit

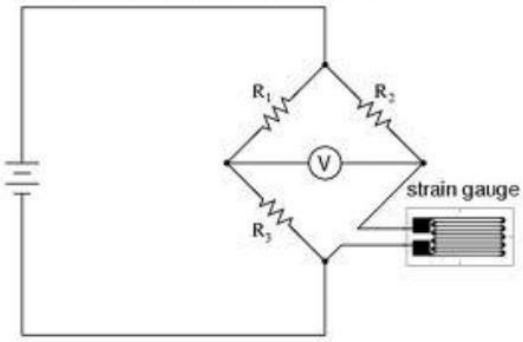

Bonded wire strain gauge

•The bonded metal wire strain gauge are used for both stress analysis and for construction of transducer.

•A resistance wire strain gauge consists of a grid of fine resistance wire of 25 μm diameter. The grid is cemented to carrier which may be a thin sheet of paper Bakelite or teflon.

•The wire is covered on top with a thin sheet of material so as to prevent it from any mechanical damage.

•The carrier is bonded with an adhesive material to the specimen which permit a good transfer of strain from carrier to grid of wires.

Bonded wire strain gauge

Linear strain gauge

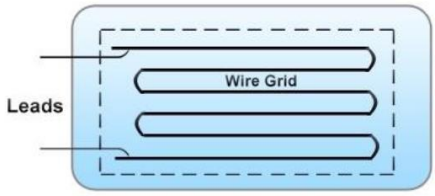

Rosette type

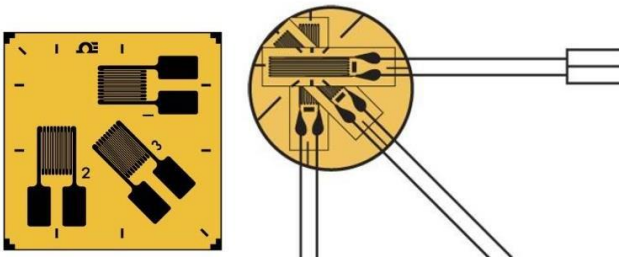

Bonded Strain Gauges These gauges are directly bonded (that is pasted) on the surface of the structure under study. Hence they are termed as bonded strain gauges. The three types of bonded strain gauges are

1. Fine wire strain gauge
2. 2. Metal foil strain gauge
3. 3. Semi-conductor gauge

Fine wire strain gauge

This is the first type of Bonded Strain Gauges.

Description

The arrangement consists of following parts,

A fine resistance wire diameter 0.025 mm which is bent again and again as shown in diagram. This is done to increase the length of the wire so that it permits a uniform distribution of stress. This resistance wire is placed between the two carrier bases (paper, Bakelite or Teflon) which are cemented to each other. The carrier base protects the gauge from damages. Leads are provided for electrically connecting the strain gauge to a measuring instrument (Wheatstone bridge).

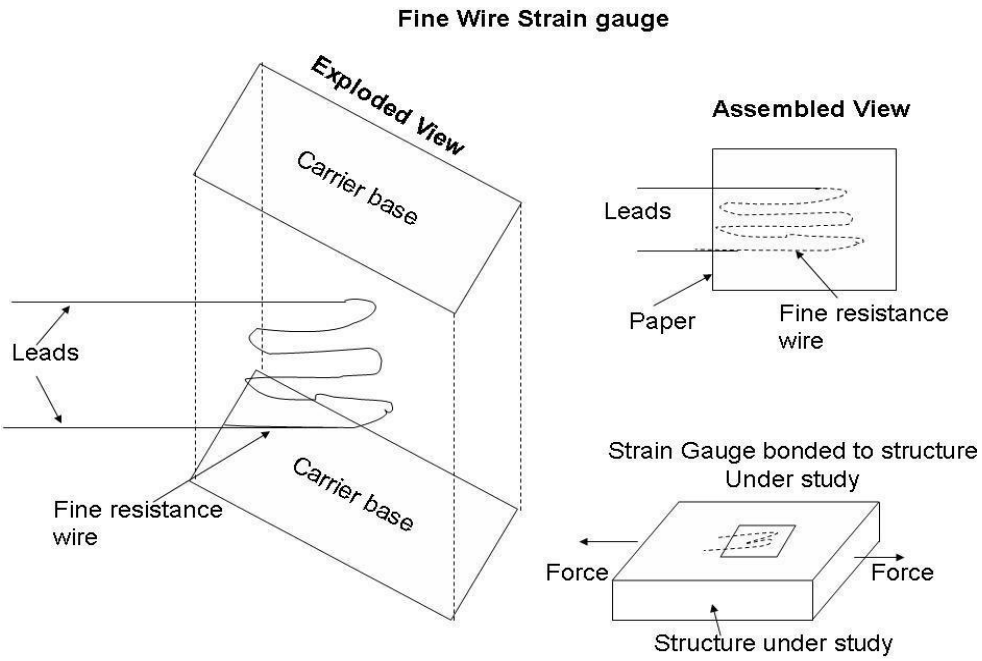

Operation

With the help of an adhesive material, the strain gauge is pasted/bonded on the structure under study. Now the structure is subjected to a force (tensile or compressive). Due to the force, the structure will change the dimension. As the strain gauge is bonded to the structure, the stain gauge will also undergo change in both in length and cross-section (that is, it strained). This strain (change in dimension) changes the resistance of the strain gauge which can be measured using a wheat stone bridge. This change in resistance of the strain gauge becomes a measure of the extent to which the structure is strained and a measure of the applied force when calibrated.

Fine Wire strain gauge Materials Material Composition
Nichrome Ni - 80% ; Cr – 20%
Constantan Ni – 45%; Cu – 55%
Nickel ----
Platinum ----
Isoelastic Ni – 36%; Cr – 8%; Mo – 0.5%

Advantages of Fine Wire Strain Gauge

The range of this gauge is +/- 0.3% of strain.
This gauge has a high accuracy.
Has a linearity of +/- 1%.

Limitation of Fine Wire strain gauge

- These gauges cannot be detached and used again (because the gauges are bonded to the structure).
- These gauges are costly.

Metal Foil Strain Gauge

Description of Metal Foil Strain Gauge The arrangement consists of the following; The metal foil of 0.02mm thick is produced using the printed circuit technique. This metal foil is produced on one side of the plastic backing. Leads are soldered to the metal foil for electrically connecting the strain gauge to a measuring instrument (wheat stone bridge).

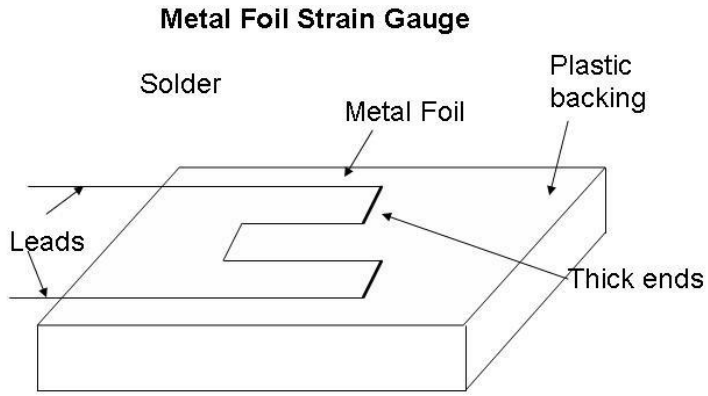

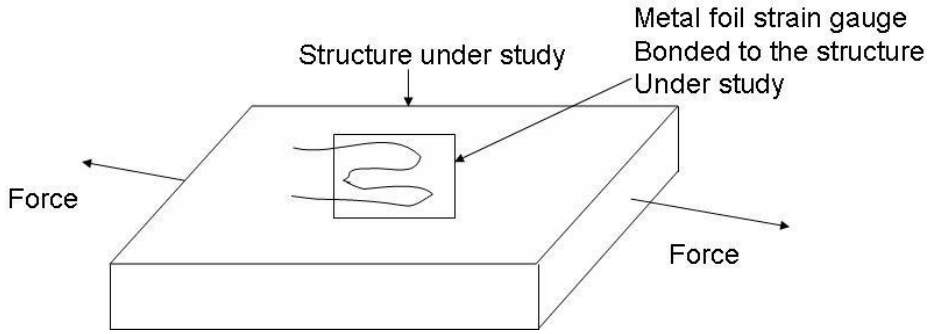

Operations of Metal foil Strain gauge

With the help of an adhesive material, the strain gauge is pasted/bonded on the structure under study. Now the structure is subjected to a force (tensile or compressive). Due to the force, the structure will change the dimension. As the strain gauge is bonded to the structure, the stain gauge will also undergo change in both in length and cross-section (that is, it strained). This strain (change in dimension) changes the resistance of the strain gauge which can be measured using a wheat stone bridge. This change in resistance of the strain gauge becomes a measure of the extent to which the structure is strained and a measure of the applied force when calibrated. Same as Fine Wire strain gauge operation.

Advantages of Metal foil Strain gauge

- These strain gauges can be manufactured in any shape.
- Perfect bonding of the strain gauge is possible with structure under study.
- The backing can be peeled off and the metal foil with leads can be used directly on the structure under study. In such cases, a ceramic adhesive is to be used.
- These gauges have a better fatigue life.
- Has good sensitivity and have stability even at high temperatures.

Semi – conductor or Piezo Resistive Strain Gauge

Description of Piezo Resistive Strain Gauge.

The arrangement of a semi-conductor strain gauge is as follows:

The sensing element is rectangular filament made as a wafer from silicon or geranium crystals. To these crystals, boron is added to get some desired properties and this process is called doping and the crystals are called doped crystals. This sensing element is attched to a plastics or stainless steel backing. Leads made of gold are drawn out from the sensing element for electrically connecting the strain gauge to a measuring instrument (wheat stone bridge).

There are two types of sensing element namely:

Negative or n-type (resistance decrease with respect to tensile strain).

- Positive or P-type (resistance increase with respect to tensile strain).

Operation

With the help of an adhesive material, the strain gauge is pasted/bonded on the structure under study. Now the structure is subjected to a force (tensile or compressive). Due to the force, the structure will change the dimension. As the strain gauge is bonded to the structure, the stain gauge will also undergo change in both in length and cross-section (that is, it strained). When the sensing element (crystal) of the semiconductor strain gauge is strained, its resistivity changes contributing to a change in the resistance of the strain gauge. The change in the resistance of the strain gauge is measured using a wheat stone bridge. . This change in resistance of the strain gauge becomes a measure of the extent to which the structure is strained and a measure of the applied force when calibrated.

Semi-Conductor or Piezo Resistive Strain Gauge

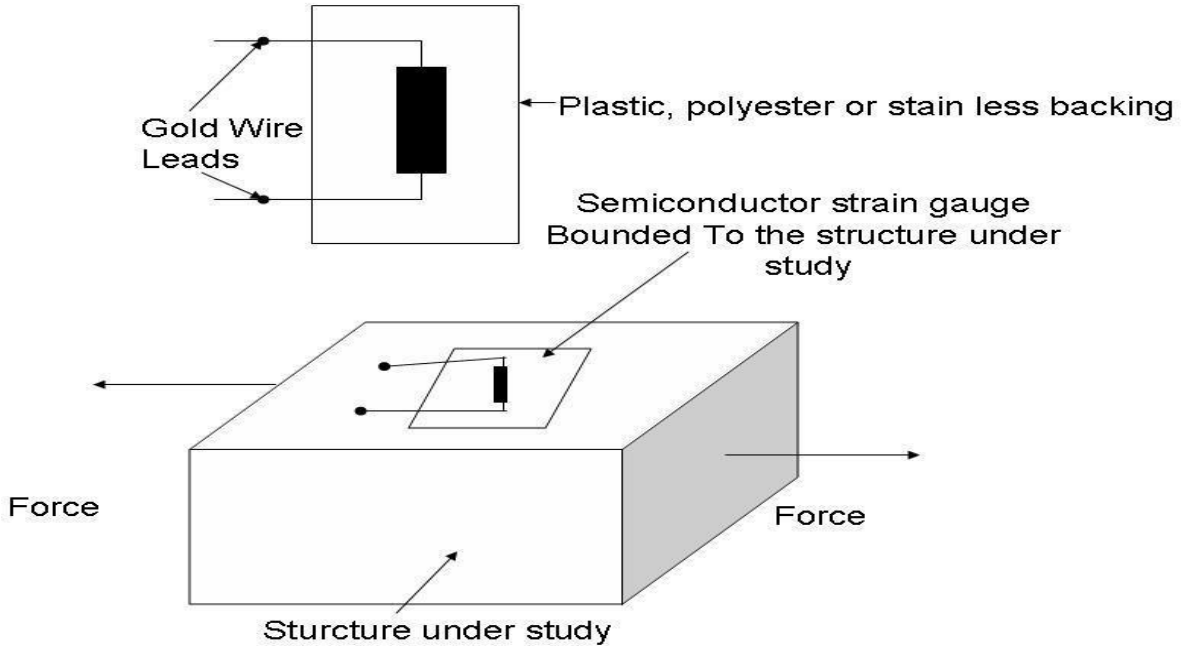

Advantages of semi-conductor Strain gauges

- These gauges have high gauge factor and hence they can measure very small strains.
- They can be manufactured to very small sizes.
- They have an accuracy of 2.3%
- They have excellent hysteresis characteristics.
- They have a good frequency of response.
- They have good fatigue life.

Limitation of semi-conductor Strain gauges

- These gauges are brittle and hence they cannot be used for measuring large strain.
- The gauge factor is not constant.
- These gauges have poor linearity.
- These gauges are very costly and are difficult to be bonded onto the structure under study.
- These gauges are sensitive to change in temperature

Unit-5

Measurement Of Force Torque And Pressure

MODULE 5

MEASUREMENTS OF FORCE, TORQUE AND PRESSURE

CONTENTS

5.1 Introduction

5.2 Analytical Balance (Equal arm balance)

5.3 Unequal arm balance

5.4 Platform Balance (Multiple Lever System)

5.5 Proving Ring

5.6 Torque Measurement

5.7 Pressure Measurements

5.8 Temperature Measurements

5.9 Strain Measurements

OBJECTIVES

1. Is to get knowledge of force, pressure and temperature measuring devices and their applications.

5.1 Introduction

A force is defined as the reaction between two bodies. This reaction may be in the form of a tensile force (pull) or it may be a compressive force (push). Force is represented mathematically as a vector and has a point of application. Therefore the measurement of force involves the determination of its magnitude as well as its direction. The measurement of force may be done by any of the two methods.

- Direct method: This involves a direct comparison with a known gravitational force on a standard mass example by a physical balance.
- Indirect method: This involves the measurement of the effect of force on a body. For example.

a) Measurement of acceleration of a body of known mass which is subjected to force.

b) Measurement of resultant effect (deformation) when the force is applied to an elastic member.

Direct method

A body of mass "m" in the earth's gravitational field experiences a force F which is given by F = ma = W.

Where 'W' is the weight of the body 'a' is the acceleration due to gravity. Any unknown force may be compared with the gravitational force (ma) on the standard mass 'm'. The values of 'm' and 'a' should be known accurately in order to know the magnitude of the gravitation force.

Mass is a fundamental quantity and its standard kilogram is kept at France. The other masses can be compared with this standard with a precision of a few parts in109. On the other hand, 'a' is a derived quantity but still makes a convenient standard. Its value can be measured with an accuracy of 1 part in 106. Therefore any unknown force can be compared with the gravitational force with an accuracy of about this order of magnitude.

5.2 Analytical Balance : (Equal arm balance)

Direct comparison of an unknown force with the gravitational force can be explained with the help of an analytical balance. The direction of force is parallel to that of the gravitational force, and hence only its magnitude needs to be determined. The constructional details of an analytical balance are as shown in Fig.

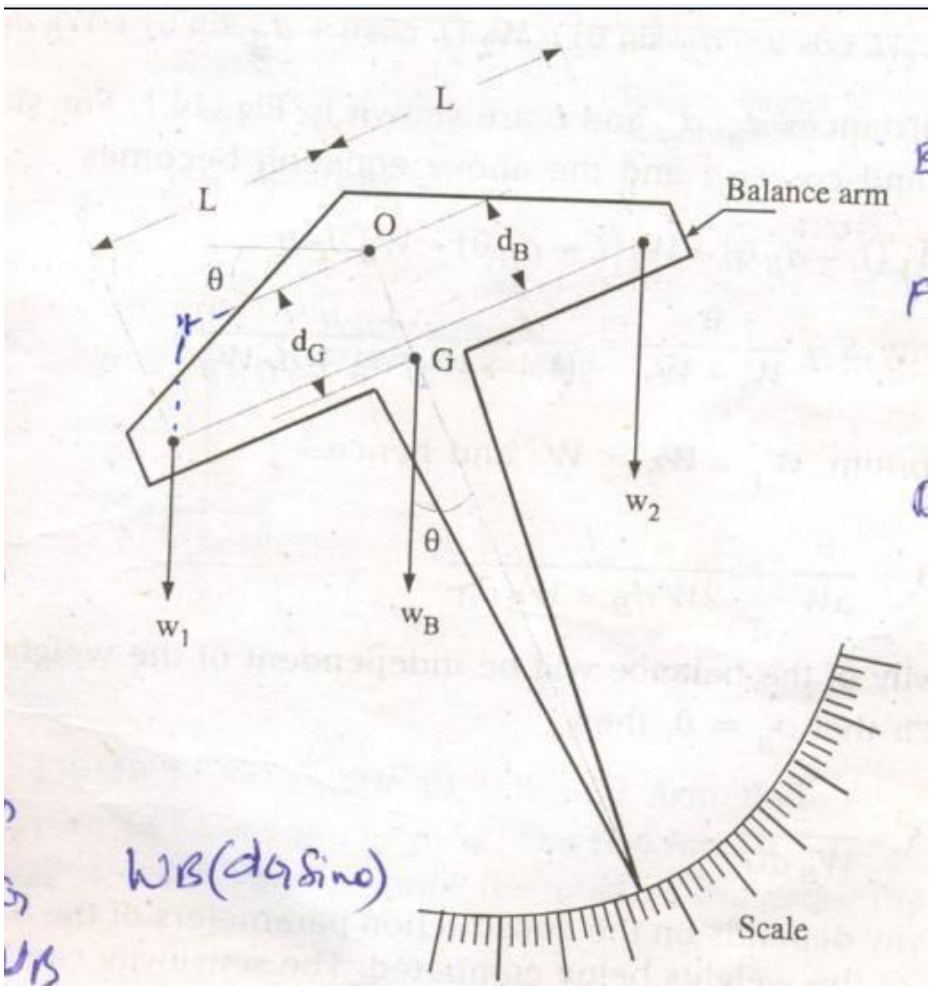

The balance arm rotates about the point "O" and two forces W1 and W2 are applied at the ends of the arm. W1 is an unknown force and W2 is the known force due to a standard mass. Point G is the centre of gravity of the balance arm, and WB is the weight of the balance arm and the pointer acting at G. The above figure show the balance is unbalanced position when the force W1 and W2 are unequal. This unbalance is indicated by the angle θ which the pointer makes with the vertical.

In the balanced position $W_1 = W_2$, and hence θ is zero. Therefore, the weight of the balance arm and the pointer do not influence the measurements.

The sensitivity S of the balance is defined as the angular deflection per unit of unbalance is between the two weight W_1 and W_2 and is given by

$$S = \frac{\theta}{w_1 - w_2} = \frac{\theta}{\Delta W}$$

where, ΔW is the difference between W_1 and W_2. The sensitivity S can be calculated by writing the moment equation at equilibrium as follows:

$W_1 (L \cos\theta - d_B \sin\theta) = W_2 (L \cos\theta + d_B \sin\theta) + W_B d_G \sin\theta$

where the distances d_B, d_G and L are shown in Fig. For small deflection angles $\sin\theta = \theta$ and $\cos\theta = 1$ and the above equation becomes

$W_1 (L - d_B \theta) = W_2 (L + d_B \theta) + W_B d_G \theta$

$$\therefore \textit{ The Sensitivity } \quad S = \frac{\theta}{w_1 - w_2} = \frac{L}{(w_1 + w_2) d_B + d_G W_B}$$

Near Equilibrium, $W_1 = W_2 = W$ and hence

$$S = \frac{\theta}{\Delta w} = \frac{L}{2W d_B + W_B\, d_G}$$

The sensitivity of the balance will be independent of the weight W Provided it is designed such that $d_B = 0$ then

$$S = \frac{L}{W_B\, d_G}$$

The sensitivity depends on the construction parameters of the balance arm and is independent of the weights being compared. The sensitivity can be improved by decreasing both d_G and W_B and increasing L. A compromise however, is to be struck between the sensitivity and stability of the balance.

5.3 UNEQUAL ARM BALANCE

An equal arm analytical balance suffers from a major disadvantage. It requires a set of weights which are at least as heavy as the maximum weight to be measured. In order that the heavier weights may be measured with the help of lighter weights, balances with unequal arms are used.

The unequal arm balance uses two arms. One is called the **load arm** and the other is called the **power arm.** The load arm is associated with load i.e., the weight force to be measured,

while power arm is associated with power i.e, the force produced by counter posing weights required to set the balance in equilibrium.

Fig. shows a typical unequal arm balance. Mass ‘m' acts as power on the beam and exerts a force of F_g due to gravity where $F_g = m \times g$. This force acts as counterposing force against the load which may be a test force F_t.

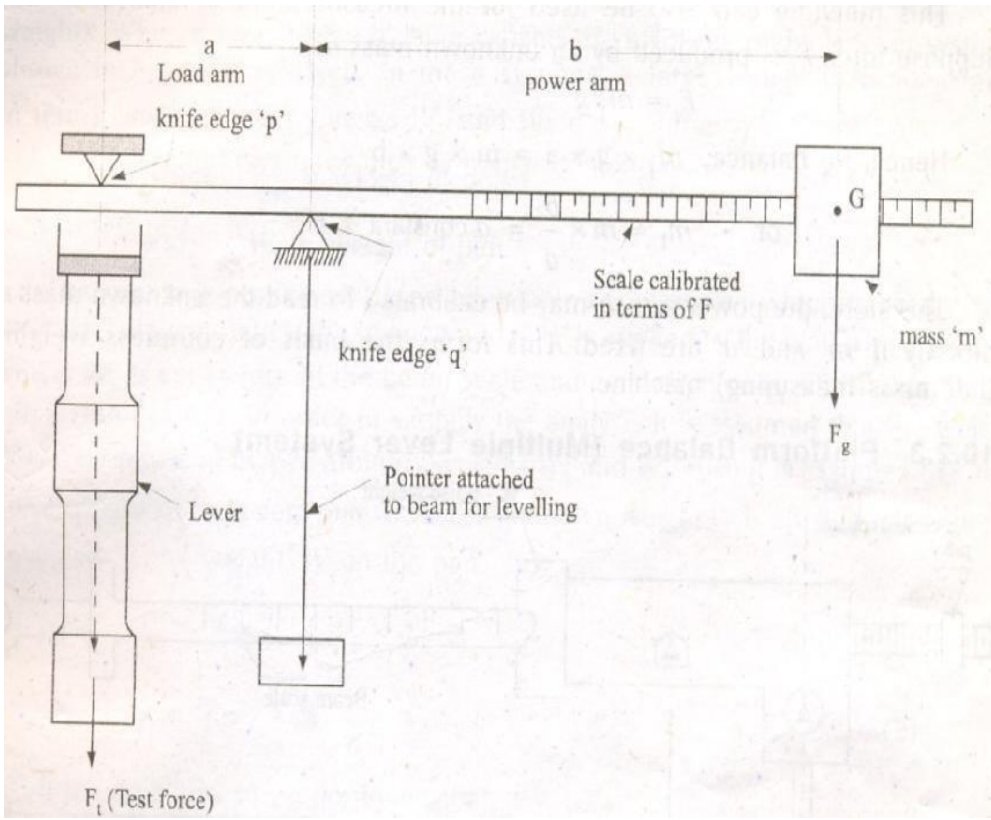

Fig. Schematic of Unequal Arm Balance

The beam is pivoted on a knife edge *'q'*. The test force F_t is applied by a screw or a lever through a knife edge *'p'* until the pointer indicates that the beam is horizontal.

For balance of moments, $F_t(a) = F_g(b)$

or test force $F_t = F_g(b/a)$

$= m \times g \times b/a$

$=$ constant $\times$ b (provided that g is constant).

Therefore the test force is proportional to the distance 'b' of the mass from the pivot. Hence, if mass 'm' is constant and the test force is applied at a fixed distance 'a' from the knife edge 'q' (i.e., the load arm is constant), the right hand of the beam (i.e., the power arm) may be

calibrated in terms of force F_t. If the scale is used in different gravitational fields, a correction may be made for change in value of 'g'.

The set-up shown in Fig. is used for measurement of tensile force. With suitable modifications, it can be used for compression, shearing and bending forces.

This machine can also be used for the measurement of unknown mass. Suppose force F_t is produced by an unknown mass m_t.

Therefore Ft = mt g

Hence, for balance, m1 x g x a = m x g x b

or m1 = m x b/a = a constant x b

Therefore, the power arm b may be calibrated to read the un known mass m1 directly if ‘m’ and ‘a’ are fixed. This forms the basis of countless weighing (i.e., mass measuring) machine.

5.4 Platform Balance (Multiple Lever System)

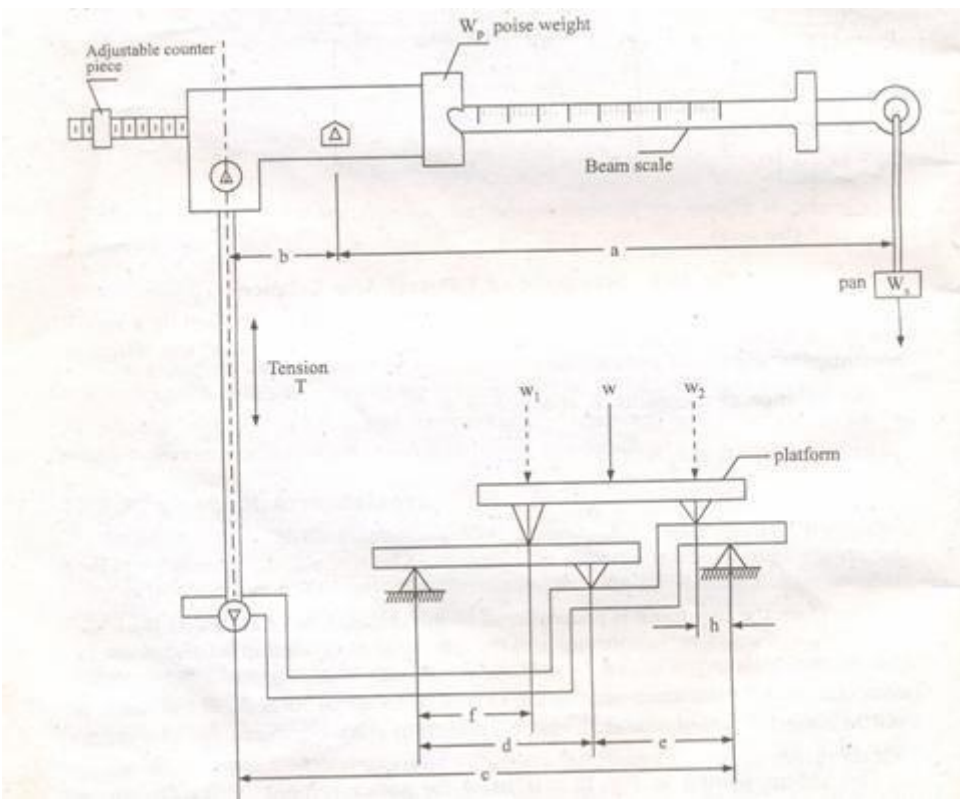

Schematic of Multiple Lever System

An equal and unequal arm balances are not suited for measurement of large weights. When measurement of large weights is involved, multiple lever systems shown in Fig. are used.

In these systems, a large weight W is measured in terms of two smaller weights Wp and Wg where, Wp = weight of poise and Ws = Weight of Pan

The system is provided with an adjustable counterpoise which is used to get an initial balance. Before the unknown load W is applied to the platform, the poise weight W_p is set at zero of the beam scale and counter piece is adjusted to obtain Initial zero balance.

In order to simplify the analysis it is assumed that the weight W can be replaced by two arbitrary weights W_1 and W_2. Also it is assumed that the poise weight W_p is at zero and when the unknown weight W is applied it is entirely balanced by the weight, W_S in the pan.

Therefore T x b = W_s x a ….(1)

and T x c = W_1 f/d e + W_2 h …(2)

If the links are so proportioned that h/e = f/d

We get : T x c = h (W_1 + W_2) hW ….(3)

From the above equation (3) it is clear that the weight W may be placed anywhere on the platform and its position relative to the two knife edges of the platform is immaterial.

T can be eliminated from equations. (l) and (3) to give

$$WS\frac{a}{b}=\frac{Wh}{d}$$

$$Unknown\ weight\ W=\frac{a}{b}\frac{c}{h}W_s$$

$$where\ m=\frac{a}{b}\frac{c}{h}\quad is\ called\ the multiplication\ ration\ of\ the\ scale$$

The multiplication ratio *M*, is indicative of weight that should be put in the pan to balance the weight on the platform. Suppose the scale has a multiplication ratio of 1000. It means that a weight of 1 kg put in the pan can balance a weight of 1000 kg put on the platform. Scales are available which have multiplication ratios as high as 10,000.

If the beam scale is so divided that a movement of poise weight Wp by 1 scale division represents a force of *x* kg, then a poise movement of y scale divisions should produce the same result as a weight W_p placed on the pan at the end of the beam. Hence,

$$Wp\ \ y = x\ y\ a$$

$$or\quad x=\frac{W_p}{a}$$

The above equation represents a relationship that determines the required scale divisions on the beam for any poise weight Wp.

5.5 Proving Ring

This device has long been the standard for calibrating tensile testing machines and is in general, the means by which accurate measurement of large static loads may be obtained. A proving ring is a circular ring of rectangular cross section as shown in the Fig. which may be subjected to tensile or compressive forces across its diameter. The force-deflection relation for a thin ring is

$$F=\frac{16}{\frac{\pi}{2}-\frac{4}{\pi}}\frac{EI}{d^3}y$$

where, *F* is the force, E is the young's modulus, I is the moment of inertia of the section about the centroidal axis of bending section. *D* is the outside diagram of the ring, y is the deflection. The above equation is derived under the assumption that the thickness of the ring is small compared to the radius. And also it is clear that the displacement is directly proportional to the force.

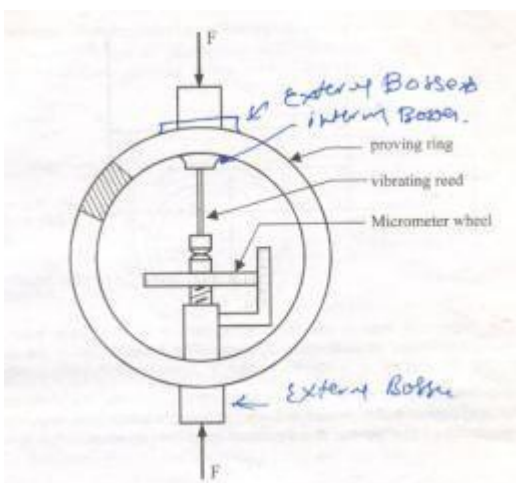

The deflection is small and hence the usefulness of the proving ring as a calibration device depends on the accuracy with which this small deflection is measured. This is done by using a precision micrometer shown in the figure. In order to obtain precise measurements one edge of the micrometer is mounted on a vibrating reed device which is plucked to obtain a vibratory motion.

The micrometer contact is then moved forward until a noticeable damping of the vibration is observed.

Proving rings are normally used for force measurement within the range of 1.5 KN to 1.5 MN. The maximum deflection is typically of the order of 1% of the outside diameter of the ring.

5.6 Torque Measurement

The force, in addition to its effect along its line of action, may exert a turning effort relative to any axis other than those intersecting the line of action as shown in Fig. Such a turning effect is called torque or couple

Torque or couple = $Fb_1 - Fb_3$

$= Fb_2$

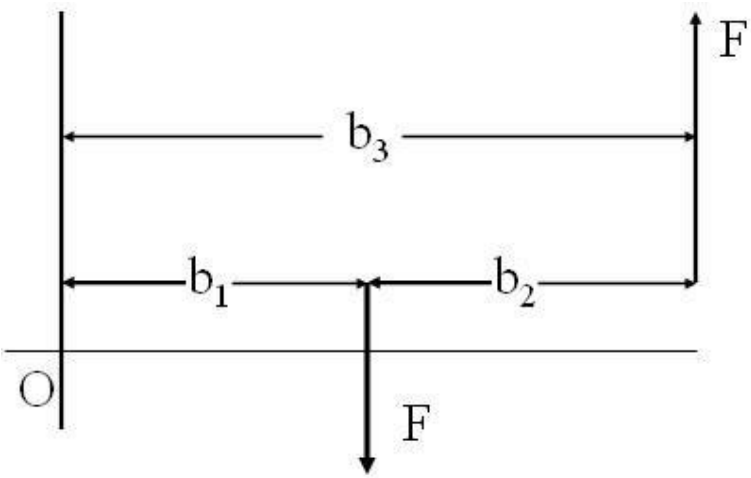

The important reason for measuring torque is to obtain load information necessary for stress or deflection analysis. The torque T may be computed by measuring the force F at a known radius 'r' from the following relation T=Fr.

However, torque measurement is often associated with determination of mechanical power, either power required to operate a machine or power developed by the machine. The power is calculated from the relation.

$$P = 2 \pi NT$$

where *N* is the angular speed in revolutions per second. Torque measuring devices used in this connection are commonly known as **dynamometers.**

There are basically three types of dynamometers.

1. Absorption dynamometers: They absorb the mechanical energy as torque is measured, and hence are particularly useful for measuring power or torque developed by power sources such as engines or electric motors.

2. Driving dynamometers: These dynamometers measure power or torque and as well provide energy to operate the devices to be tested. They are, therefore, useful in determining performance characteristics of devices such as pumps, compressors etc

3. Transmission dynamometers: These are passive devices placed at an appropriate location within a machine or in between machines to sense the torque at that location. They neither add nor subtract the transmitted energy or power and are sometimes referred to as **torque meters.**

The first two types can be grouped as mechanical and electrical dynamometers.

These dynamometers are of absorption type. The most device is the prony brake as shown in Fig.

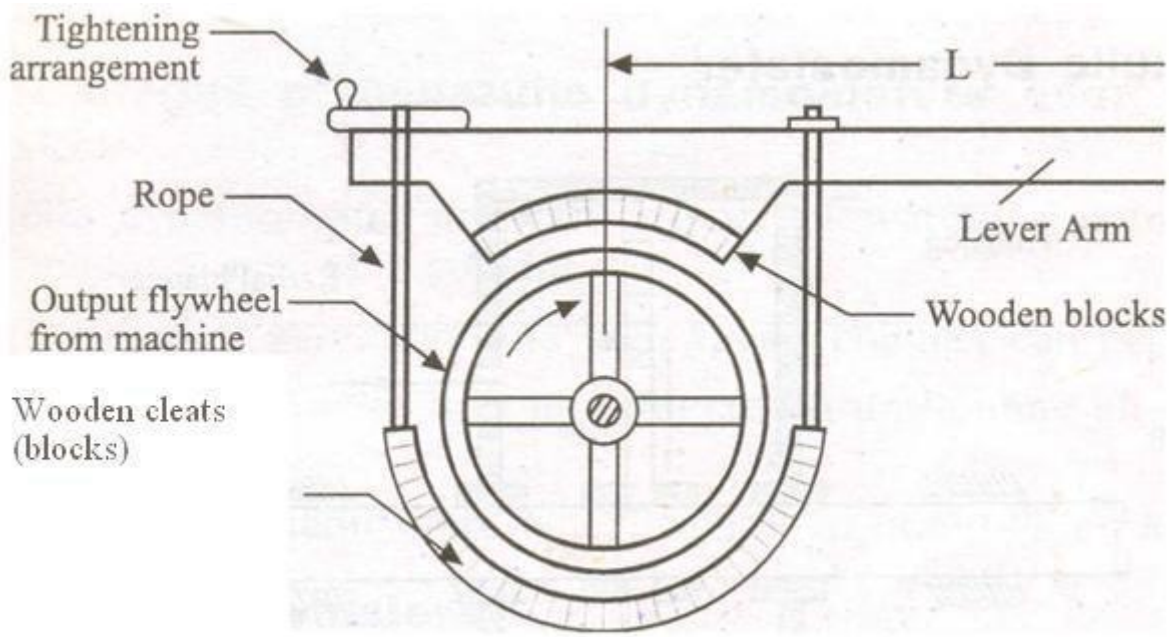

Fig. Schematic of Prony Brake

Two wooden blocks are mounted diametrically opposite on a flywheel attached to the rotating shaft whose power is to be measured. One block carries a lever arm, and an arrangement is provided to tighten the rope which is connected to the arm. The rope is tightened so as to increase the frictional resistance between the blocks and the flywheel. The torque exerted by the prony brake is T = F.L

where force F is measured by conventional force measuring instruments, like balances or load cells etc. The power dissipated in the brake is calculated by the following equation.

$$P = \frac{2\pi\ NT}{60} = \frac{2\pi\ FLN}{60}\ Watts.$$

where force F is in Newtons, L is the length of lever arm in meters, N is the angular speed in revolution per minute, and P in watts. The prony brake is inexpensive, but it is difficult to adjust and maintain a specific load.

Limitation : The prony brake is inherently unstable. Its capacity is limited by the following factors.

i). Due to wear of the wooden blocks, the coefficient of friction varies between the blocks and the flywheel. This requires continuous tightening of clamp. Therefore, the system becomes unsuitable for measurement of large powers especially when used for long periods

ii) The use of prony brake results in excessive temperature rise which results in decrease in coefficient of friction leading to brake failure. In order to limit the temperature rise, cooling is required. This is done by running water into the hollow channel of the flywheel.

iii) When the machine torque is not constant, the measuring arrangement is subjected to oscillations. There may be changes in coefficient of friction and hence the reading of force F may be difficult to take.

Hydraulic Dynamometer

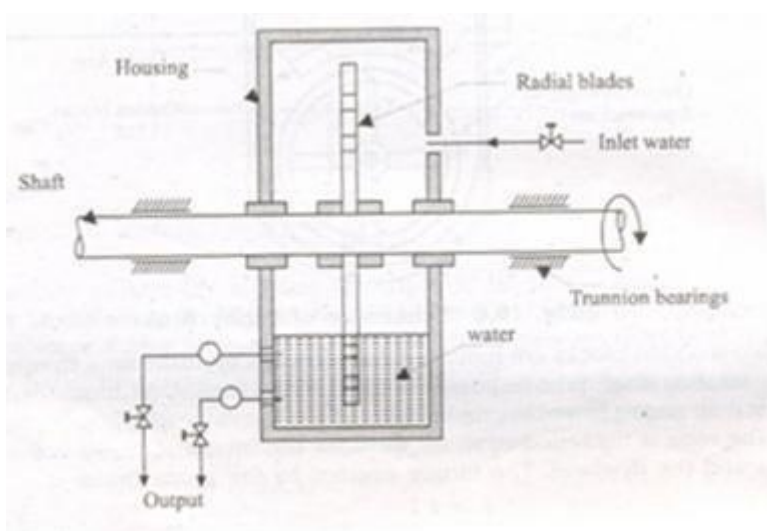

Fig. Section through a typical water brake

Fig. shows a hydraulic dynometer in its simplest form which acts as a water brake. This is a power sink which uses fluid friction for dissipation of the input energy and thereby measures the input torque-or power.

The capacity of hydraulic dynamometer is a function of two factors, speed and water level. The power consumed is a function of cube of the speed approximately. The torque is measured with the help of a reaction arm. The power absorption at a given speed may be controlled by adjustment of the water level in the housing. This type of dynamometer may be made in considerably larger capacities than the simple prony brake because the heat generated can be easily removed by circulating the water into and out of the housing. Trunnion bearings support the dynamometer housing, allowing it a freedom to rotate except for the restraint imposed by the reaction arm.

In this dynamometer the power absorbing element is the housing which tends to rotate with the input shaft of the driving machine. But, such rotation is constrained by a force-measuring device, such as some form of scales or load cell, placed at the end of a reaction arm of radius. By measuring the force at the known radius, the torque *T* may be computed by the simple relation.

Advantages of hydraulic dynamometers over mechanical brakes

- In hydraulic dynamometer constant supply of water running through the breaking medium acts as a coolant.
- The brake power of very large and high speed engines can be measured.
- The hydraulic dynamometer may be protected from hunting effects by means of dashpot damper.
- In hydraulic dynamometer there is a flexibility in controlling the operation

5.7 Pressure Measurements

Introduction

Pressure is represented as a force per unit area exerted by a fluid on a container. The standard SI unit for pressure is Newton / Square meter (N/m2) or Pascal (Pa). High pressures can be conveniently expressed in KN/m2 while low pressure are expressed in terms of mm of water or mm of mercury.

Pressure is the action of one force against another over, a surface. The pressure P of a force F distributed over an area A is defined as: P = F/A.

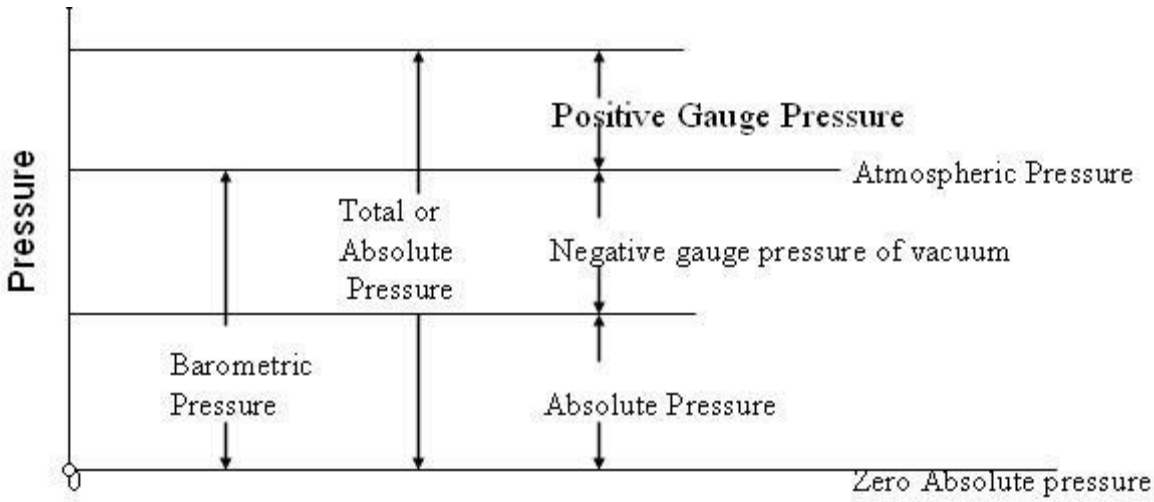

Relationship between Pressure Terms

Absolute Pressure.

It refers to the absolute value of the force per unit are exerted on the containing wall by a fluid.

Atmospheric Pressure

It is the pressure exerted by the earth's atmosphere and is usually measured by a barometer. At sea level. Its value is close to 1.013 x 105 N/m2 absolute and decreases with altitude.

Gage Pressure

It represents the difference between the absolute pressure and the local atmosphere pressure

Vacuum

It is an absolute pressure less the atmospheric pressure i.e. a negative gage pressure.

Static and Dynamic pressures

If a fluid is in equilibrium, the pressure at a point is identical in all directions and independent of orientation is referred as pressure. In dynamic pressure, there exist a pressure gradient within the system. To restore equilibrium, the fluid flows from regions of higher pressure t regions of lower pressure.

Types of Pressure Measuring Devices

(i) Mechanical Instruments: These devices may be of two types. The first type includes those devices in which the pressure measurement is made by balancing an unknown pressure with a

known force. The second types include those employing quantitative deformation of an elastic member for pressure measurements.

(ii) Electro-mechanical Instruments: this instrument employs a mechanical means for detecting the pressure and electrical means for indicating or recording the detected pressure.

(iii) Electronic Instruments: these instruments depend on some physical change which can be detected and indicated or recorded electronically.

Use of Elastic Members in Pressure Measurement

Application of pressure to certain materials causes elastic deformations. The magnitude of this elastic deformation can be related either analytically or experimentally to the applied pressure. Following are the three important elastic members used in the measurement of pressure.

(i) Bourdon tube,

(ii) Diaphragms and

(iii) Bellows

Sensing Elements

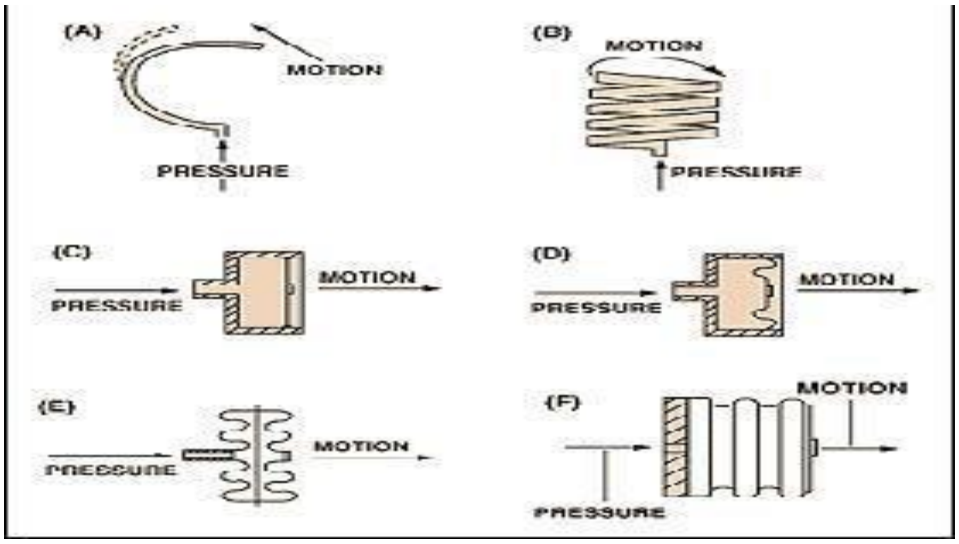

The basic pressure sensing element can be configured as a C-shaped Bourdon tube (A); a helical Bourdon tube (B); flat diaphragm (C); a convoluted diaphragm (D); a capsule (E); or a set of bellows (F).

The Bridgman Gage

The resistance of fine wires changes with pressure according to the following linear relationship. $R = R1 (1 + \alpha p)$

Where R1 Resistance at 1 atmosphere (100 KN/m2) in ohms

α Pressure coefficient of resistance in ohms/100 KN M-2

p gage pressure in KN/m2.

The above said resistance change may be used for measurement of pressures as high as 100,000 atm., 10.00KN/m2. A pressure transducer based on this principle is called a Bridgman gage. A typical gage uses a fine wire of manganin (84% Cu, 12% Mn, 4% Ni) wound in a coil and enclosed in a suitable pressure container. The pressure coefficient of resistance for this material is about 2.5x10-11 Pa-1. The total resistance of the wire is about 100Ω and conventional bridge circuits are employed for measuring the change in the resistance. Such gages are subjected to aging over a period of time, so that frequent calibration is required. However, when properly calibrated, the gage can be used for high pressure measurement with an accuracy of 0.1%. The transient response of the gage is exceedingly good. The resistance wire itself can respond of variations in the mega hertz range. Of course, the overall frequency response of the pressure-measurement system would be limited to much lower values because of the acoustic response of the transmitting fluid.

Low-Pressure measurement

In general, pressures below atmospheric may be called low pressures or vacuums. Its unit is micron, which is one-millionth of a meter (0.001 mm) of mercury column. Very low pressures may be defined as that pressures which are below 1 mm (1 torr) of mercury. An Ultra low pressure is one which has pressure less than a millimicron(10-3 micron). An ultralow pressure is one which has pressure less than a millimicron (10-3 micron). Following are the two methods of measuring low pressure.

Direct Method: In this, direct measurement resulting in displacement caused by the action of pressure. Devices used in this method are Bourdon tubes, flat and corrugated-diaphragms, capsules and various forms of manometers. These devices are limited to a lowest pressure measurement of about 10mm of mercury.

Indirect or Inferential method: In this pressure is determined through the measurement of certain other pressure-controlled properties, such as volume, thermal conductivity etc.

The Mcleod Gage

The operation of McLeod gage is based on Boyle's law.

$$p_1 = \frac{p_2 v_2}{v_1}$$

Where, p1 andp2 are pressures at initial and conditions respectively, and v1 and v2 are volumes at the corresponding conditions. By compressing a known volume of low pressure gas to a higher pressure and measuring the resulting volume and pressure we can calculate the initial pressure.

The McLeod gage is a modified mercury manometer as shown in the Fig. 11.2. The movable reservoir is lowered until the mercury column drops below the opening O.

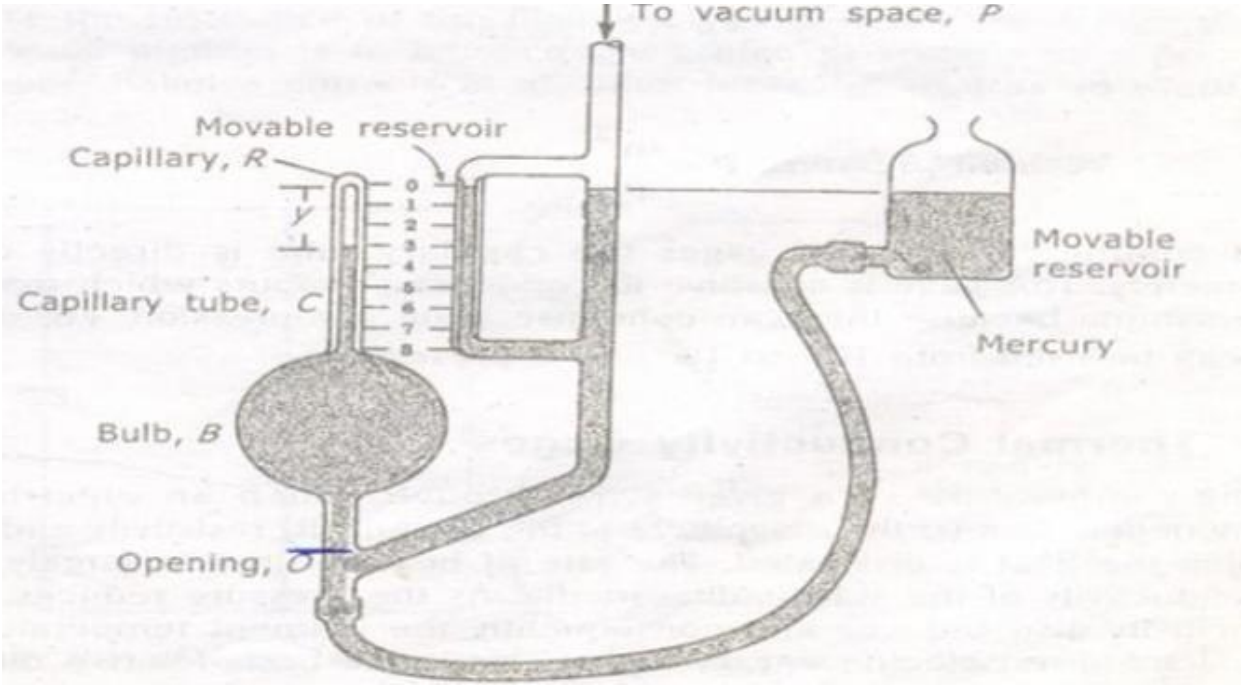

The Bulb B and capillary tube C are then at the same pressure as that of the vacuum pressure P. The reservoir is subsequently raised until the mercury fills the bulb and rises in the capillary tube to a point where the level in the reference capillary R is located at the zero point. If the volume of the capillary tube per unit length is 'a' then the volume of the gas in the capillary tube is Vc = ay (1).

Where 'y' is the length of gas occupied in capillary tube.

If the volume of capillary tube, bulb and the tube down to the opening is VB. Assuming isothermal Compression, the pressure of the gas in the capillary tube is

$$P_C = P\frac{V_B}{V_C} \qquad \text{-------(2)}$$

The pressure indicated by the capillary tube is

Pc - P = ------- (3)

Where, we are expressing the pressure in terms of the height of the mercury column. And combining equations (1), (2) and (3)

$$P = \frac{ay^2}{V_B - ay}$$

Usually ay << VB

$$\therefore\ Vacuumpressur,\ P = \frac{ay^2}{V_B}$$

In commercial McLeod gages the capillary tube is directly calibrated in micrometers. This gage is sensitive to condensed vapours which may be present in the sample because they can condense upon compression. For dry gases the gage can be used from 10^{-2} to 10^{2} μm of pressure.

Thermal Conductivity Gages

The temperature of a given wire through which an electric current is flowing depend, on (i) the magnitude of the current (ii) resistivity and (iii) the rate at which the heat is dissipated. The rate of heat dissipation largely depends on the conductivity of the surrounding media. As the pressure reduces, the thermal conductivity also reduces and consequently the filament temperature becomes higher for a given electric energy input. This is the basis for two different forms of gages to measure low pressures.

i). Pirani thermal conductivity gage

ii). Thermocouple vacuum gage

Pirani Thermal Conductivity Gages

The pirani gage as shown in the Fig. operates on the principle that if a heated wire is placed in a chamber of gas, the thermal conductivity of the gas depends on pressure. Therefore the transfer of energy from the wire to the gas is proportional to the gas pressure. If the supply of

heating energy to the filament is kept constant and the pressure of the gas is varied, then the temperature of the filament will alter and is therefore a method of pressure measurement.

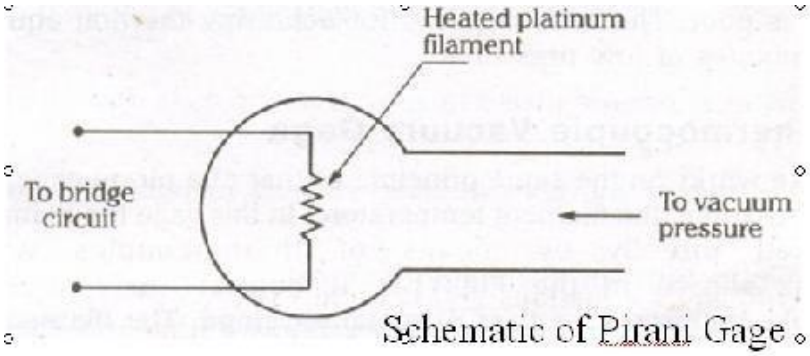

Schematic of Pirani Gage

To measure the resistance of the filament wire a resistance bridge circuit is used. The usual method is to balance the bridge at some datum pressure and use the out-of-balance currents at all other pressures as a measure of the relative pressures.

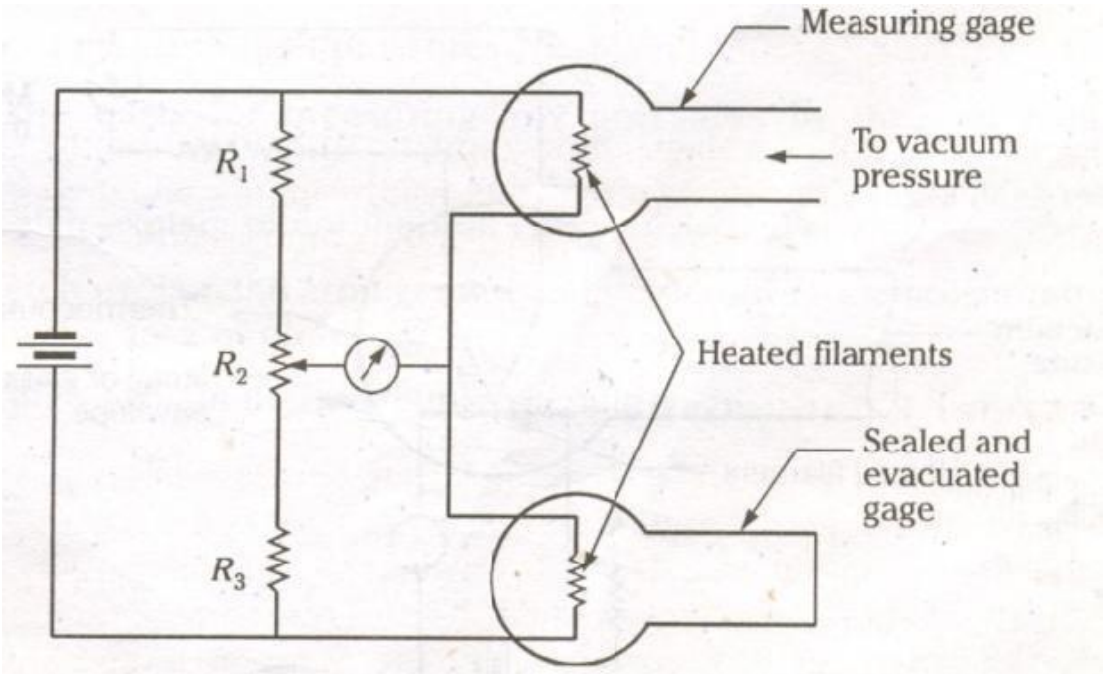

Pirani gage arrangement to compensate for ambient temperature Changes

The heat loss from the filament is also a function of ambiet temperature and compensation for this effect may be achieved by connecting two gages in series as shown in Fig. The measuring gage is first evacuated and both the measuring and sealed gages are exposed to the same environment conditions. The bridge circuit is then adjusted through the resistor *R2* to get a null condition. When the measuring gage is exposed to the test vacuum pressure, the

deflection of the bridge from the null position will be compensated for changes in environment temperature.

Pirani gages require calibration and are not suitable for use at pressures below l) lm and upper limit is about 1 torr. For higher pressures, the thermal conductivity changes very little with pressure. It must be noted that the heat loss from the filament is also a function of the conduction losses to the filament supports and radiation losses to the surroundings. The transient response of the pirani gage is poor. The time required for achieving thermal equilibrium may be of several minutes at low pressures.

Thermocouple Vacuum gage

This gage works on the same principle as that of a pirani gage, but differs in the means for measuring the filament temperature. In this gage the filament temperature is measured directly by means of thermocouples welded directly to them as shown in the Fig. 11.5. It consists of heater filament and thermocouple enclosed in a glass or metal envelope.

The filament is heated by a constant current and its temperature depends upon the amount of heat lost to the surroundings by conduction and convection. At low pressures, the temperature of the filament is a function of the pressure of surrounding gas. Thus, the thermocouple provides an output voltage which is a function of temperature of the filament and consequently the pressure of the surrounding gas. The moving coil instrument may be directly calibrated to read the pressure.

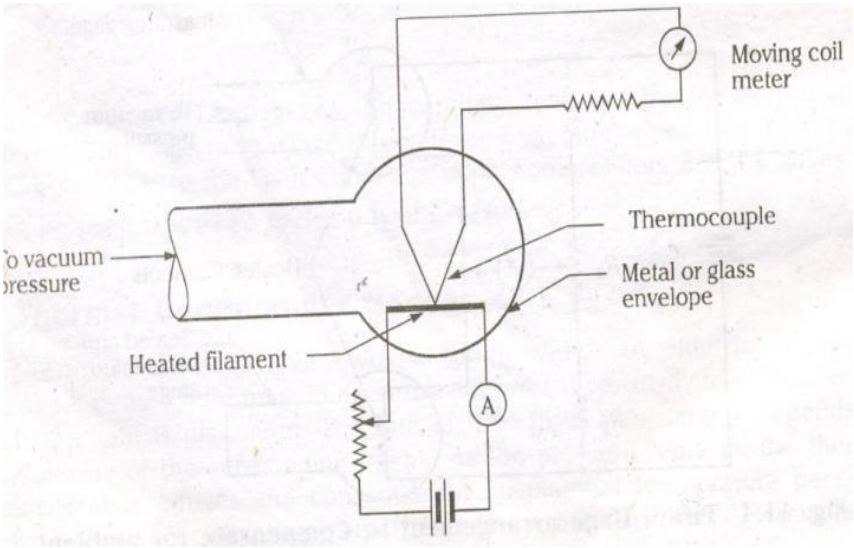

Thermocouple Vacuum Gage

5.8 Temperature Measurements

Introduction

Temperature measurement is the most common and important measurement in controlling any process. Temperature may be defined as an indication of intensity of molecular kinetic energy within a system. It is a fundamental property similar to that of mass, length and time, and hence it is difficult to define. Temperature cannot be measured using basic standards through direct comparison. It can only be determined through some standardized calibrated device.

Change in temperature of a substance causes a variety of effects such as:

i) Change in physical state,

ii) Change in chemical state,

iii) Change in physical dimensions,

iv) Change in electrical properties and

v) Change in radiating ability.

The change in physical and chemical states cannot be used for direct temperature measurement. However, temperature standards are based on changes in physical state. A change in physical dimension due to temperature shift forms the basis of operation for liquid in- glass and bimetallic thermometers. Changes in electrical properties such as change in electrical conductivity and thermoelectric effects which produce electromotive force forms the basis for thermocouples. Another temperature-measuring method using the energy radiated from a hot body forms the basis of operation of optical radiation and infrared pyrometers.

Temperature Measurement by Electrical Effects

Electrical methods of temperature measurement are very convenient because they provide a signal that can be easily detected, amplified, or used for control purposes. In addition, they are quite accurate when properly calibrated and compensated. Several temperature-sensitive electrical elements are available for measuring temperature. Thermal emf and both positive and negative variations in resistance with temperature are important among them.

Thermo resistive Elements

The electrical resistance of most materials varies with temperature. Resistance elements which are sensitive to temperature are made of metals and are good conductors of electricity. Examples are nickel, copper, platinum and silver. Any temperature-measuring device which uses these elements is called resistance thermometers or resistance temperature detectors (RTD). If semiconducting materials like combination of metallic oxides of cobalt, manganese and nickel having large negative resistance co- efficient are used then such devices are called thermistors.

The differences between these two kinds of devices are:

Sl. No	Resistance Thermometer	Thermistor
1	In this resistance change with temperature shift is small and positive.	In this resistance change with temperature shift is relatively large and negative
2	Provides nearly a linear temperature-resistance relation	Non-linear temperature resistance relation.
3	Practical operating temperature range is -250 to 1000°C	Practical operating temperature range is -100 to 275°C.
4	More time-stable hence provide better reproducibility with low hysteresis	Not time-stable

Electrical Resistance Thermometers

The desirable properties of resistance-thermometer materials are:

i) The material should permit fabrication in convenient sizes.

ii) Its thermal coefficient of resistivity should be high and constant

iii) They must be corrosion-resistant and should not undergo phase changes with in the temperature ranges.

iv) Provide reproducible and consistent results.

Electrical Resistance Thermometers

Unfortunately, there is no universally acceptable material and the selection of a particular material depends on the compromises. Although the actual resistance-temperature relation must be determined experimentally, for most metals the following empirical equation may be used.

$$R_t = Ro\ (l + aT + bT_2)$$

Where, Rt is the resistance at temperature T, Ro is the resistance at the reference temperature, T is the temperature and a and b are constants depending on the material.

Usually platinum, nickel and copper are the most commonly used materials, although others like tungsten, silver and iron can also be used.

Fig. shows the construction of two forms of resistance thermometer In Fig. (a) the element consists of a number of turns of resistance wire wrapped around a solid silver core. Heat is transmitted quickly from the end flange through the core to the windings.

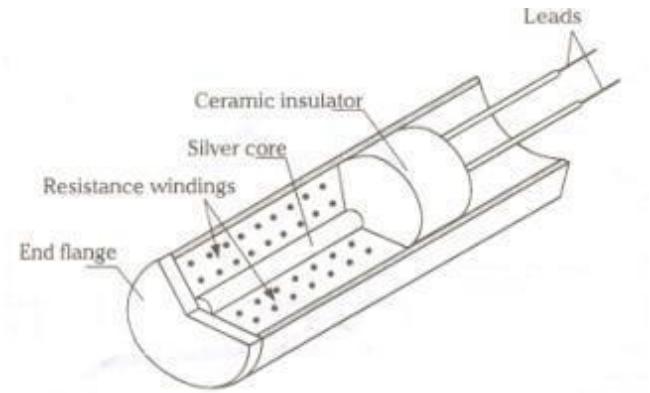

Another form of construction is shown in Fig. (b) in which the resistance wire is wrapped around a mica strip and sandwiched between two additional mica strips. These resistance thermometers may be used directly. But, when permanent installation with corrosion and mechanical protection is required a well or socket may be used.

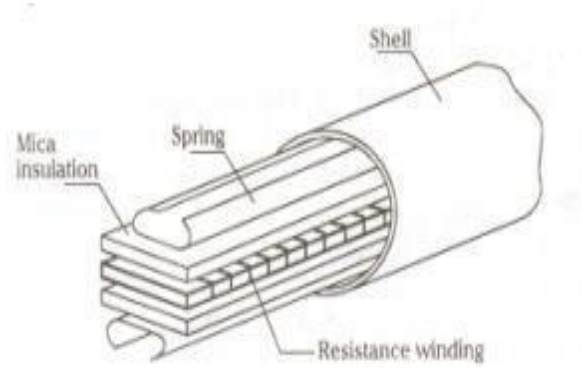

Instrumentation for Resistance Thermometers

Some type of bridge circuit is normally used to measure resistance change in the thermometers. Leads of appropriate length are normally required, and any resistance change in them due to any cause affects the measurement. Hence, the lead resistance must be as low as possible relative to the element resistance.

Three methods of compensating lead resistance error are as shown in the Fig. The arms AD and DC each contain the same length of leads. If the leads have identical properties and are at identical ambient conditions, then the effects introduced by one arm will be cancelled by the other arm.

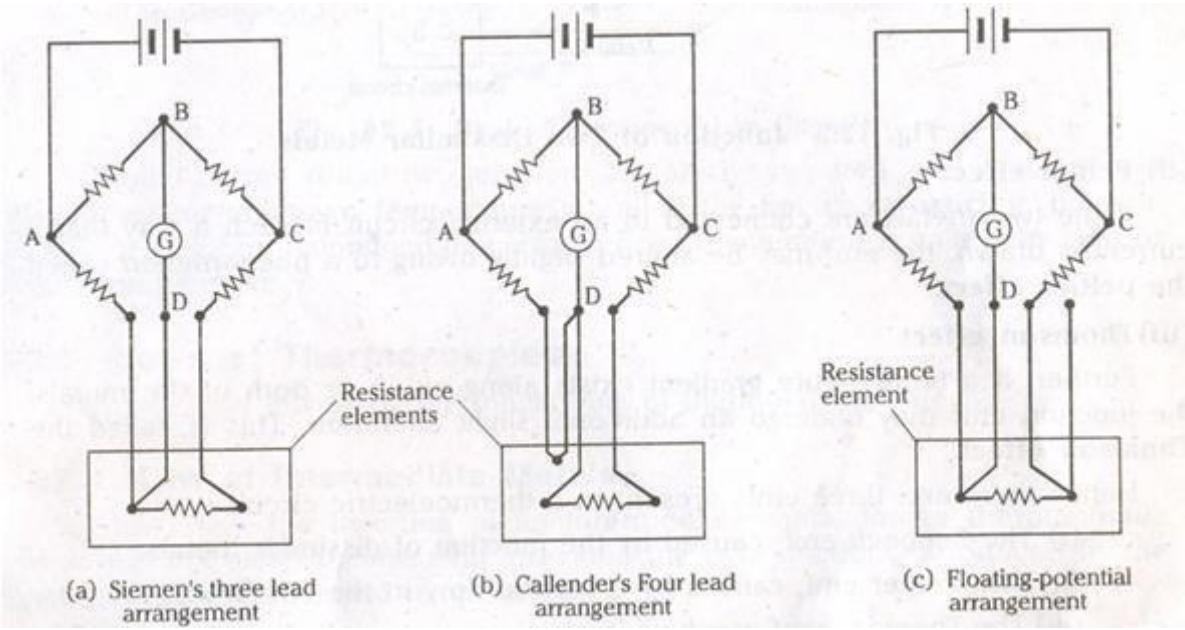

Methods of Compensating Lead Resistance Error

The Siemen's three-lead arrangement is the simplest corrective circuit. At balance conditions the centre lead carries no current, and the effect of the resistance of the other two leads is cancelled out. The Siemen's three-lead arrangement is the simplest corrective circuit. At balance conditions the centre lead carries no current, and the effect of the resistance of the other two leads is cancelled out. The calendar's four-lead arrangement solves the problem by inserting two additional lead wires in the adjustable leg of the bridge so that the effect of the lead wires on the resistance thermometer is cancelled out. The floating-potential arrangement is same as the Siemens' connection, but with an extra lead. This extra lead may be used to check the equality of lead resistance. The thermometer reading may be taken in the position shown, followed by additional readings with the two right and left leads interchanged, respectively. By averaging these readings, more accurate results may be obtained.

Usually, null-balance bridge is used but is limited to static or slowly changing temperatures. While the deflection bridge is used for rapidly changing temperatures.

1. See beck Effect:

When two dissimilar metals are joined together as shown in the Fig. an electromotive force (emf) will exists between the two points A and B, which is primarily a function of the junction temperature. This phenomenon is called the **see beck effect.**

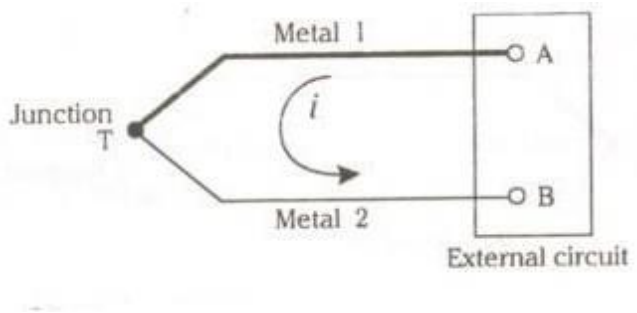

Junction of Two Dissimilar Metals

2. Peltier effect

If the two metals are connected to an external circuit in such a way that a current is drawn, the emf may be altered slightly owing to a phenomenon called the **peltier effect.**

3.Thomson effect

Further, if a temperature gradient exists along either or both of the metals, the junction emf may undergo an additional slight alteration. This is called the **Thomson effect**.

Hence there are, three emfs present in a thermoelectric circuit:

i) The Seebeck emf, caused by the junction of dissimlar metals

ii) The Peltier emf, caused by a current flow in the circuit and

iii) The Thomson emf, resulting from a temperature gradient in the metals.

The Seebeck emf is important since it depends on the junction temperature.

If the emf generated at the junction of two dissimilar metals is carefully measured as a function of temperature, then such a junction may be used for the measurement of temperature.

The above effects forms the basis for a thermocouple which is a temperature measuring element.

Thermocouple

If two dissimilar metals are joined an emf exists which is a function of several factors including the temperature.When junctions of this type are used to measure temperature, they are called thermocouples.

The principle of a thermocouple is that if two dissimilar metals *A* and *B are* joined to form a circuit as shown in the Fig. It is found that when the two junctions J_1 and J_2 are at two different temperatures T_1 and T_2, small emf's e_1 and e_2 are generated at the junctions. The resultant of the two emf's causes a current to flow in the circuit. If the temperatures T_1 and T_2 are equal, the two emf's will be equal but opposed, and no current will flow. The net emf is a function of the two materials used to form the circuit and the temperatures of the two junctions. The actual relations, however, are empirical and the temperature-emf data must be based on experiment. It is important that the results are reproducible and therefore provide a reliable method for measuring temperature.

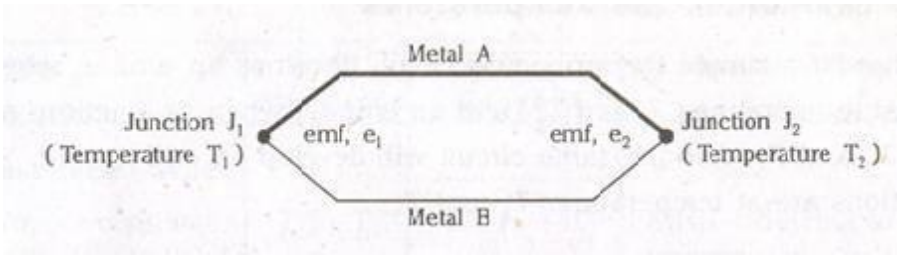

Basic Thermocouple Circuit

It should be noted that two junctions are always required, one which senses the desired or unknown temperature is called the **hot** or **measuring** junction. The other junction maintained at a known fixed temperature is called the **cold** or **reference** junction.

Laws of Thermocouples

The two laws governing the functioning of thermocouples are:

i) Law of Intermediate Metals:

It states that the insertion of an intermediate metal into a thermocouple circuit will not affect the net emf, provided the two junctions introduced by the third metal are at identical temperatures.

Application of this law is as shown in Fig. In Fig. (a), if the third metal C is introduced and the new junctions R and S are held at temperature T3, the net emf of the circuit will remain unchanged. This permits the insertion of a measuring device or circuit without affecting the temperature measurement of the thermocouple circuit

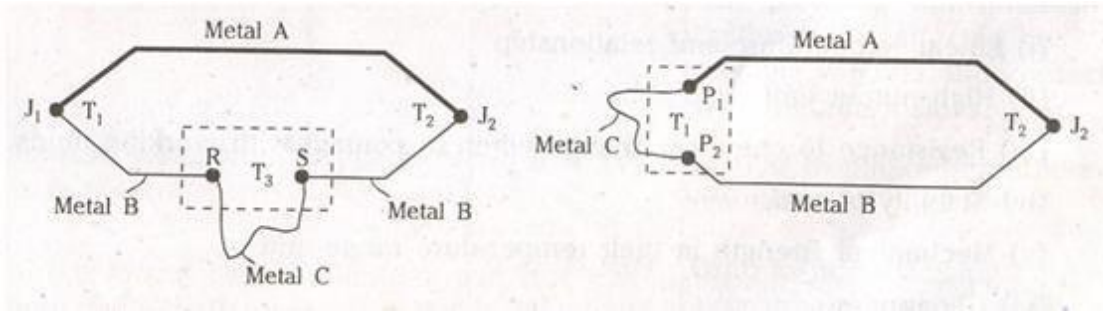

Circuits illustrating the Law of Intermediate Metals

In the Fig. (b) the third metal is introduced at either a measuring or reference junction. As long as junctions P_1 and P_2 are maintained at the same temperature T_P the net emf of the circuit will not be altered. This permits the use of joining metals, such as solder used in fabricating the thermocouples. In addition, the thermocouple may be embedded directly into the surface or interior of a conductor without affecting the thermocouple's functioning.

i) Law of Intermediate Temperatures:

It states that "If a simple thermocouple circuit develops an emf, e_1 when its junctions are at temperatures T_1 and T_2, and an emf e_2, when its junctions are at temperature T_2 and T_3. And the same circuit will develop an emf $e_3 = e_1 + e_2$, when its junctions are at temperatures T_1 and T_3.

Circuits illustrating the Law of Intermediate Temperatures

This is illustrated schematically in the above Fig. This law permits the thermocouple calibration for a given temperature to be used with any other reference temperature through the use of a suitable correction. Also, the extension wires having the same thermo-electric characteristics as those of the thermocouple wires can be introduced in the circuit without affecting the net emf of the thermocouple.

Measurement of Thermal emf

The magnitude of emf developed by the thermocouples is very small (0.01 to 0.07 millivoIts/^{0}C), thus requires a sensitive devices to measure. Measurement of thermocouple output may be obtained by various ways. like millivolt meter or voltage-balancing potentiometer

etc. Fig. shows a simple temperature-measuring system using a thermocouple as the sensing element and a potentiometer for indication. The thermoelectric circuit consists of a measuring junction J_1 and reference junction J_2, at the potentiometer. By the law of intermediate metals the potentiometer box may be considered to be an intermediate conductor. Assuming the two potentiometer terminals to be at identical temperature, the reference junction can be formed by the ends of the two thermocouple leads as they attach to the terminals. The reference temperature is determined using liquid-in-glass thermometer placed near the terminals. The value of the emf developed by the thermocouple circuit is measured using the potentiometer. Then using the table (values of emf Vs temperature) the temperature of the measuring junction can be determined.

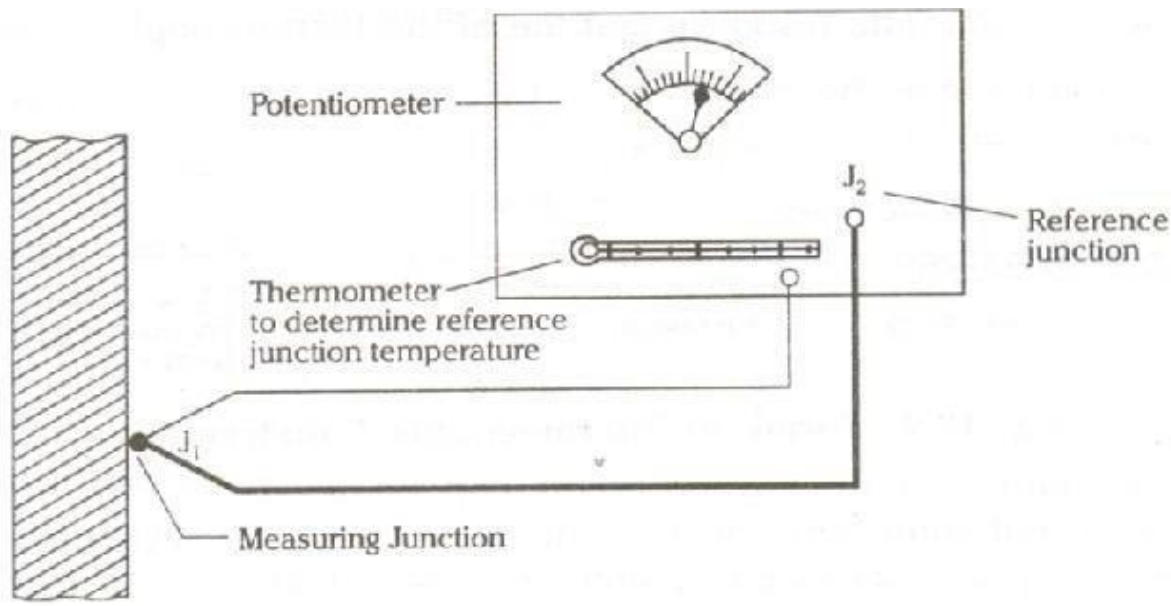

Temperature measuring Arrangement using Thermocouple

Advantages and Disadvantages of Thermocouples

Advantages

1. Thermocouples are cheaper than the resistance thermometers.

2. Thermocouples follow the temperature changes with small time lag thus suitable for recording rapidly changing temperatures.

3. They are convenient for measuring the temperature at a particular point.

Disadvantages

1. Possibility of inaccuracy due to changes in the reference junction temperature hence they cannot be used in precision work.

2. For long life, they should be protected to prevent contamination and have to be chemically inert and vacuum tight.

3. When thermocouples are placed far from the measuring systems, connections are made by extension wires. Maximum accuracy is obtained only when compensating wires are of the same material as that of thermocouple wires, thus the circuit becomes complex.

Principles used for Radiation Temperature Measuring Devices

1. Total Radiation Pyrometry:

In this case the total radiant energy from a heated body is measured. This energy is represented by the area under the curves of above Fig. and is given by Stefen – Boltzmann law. The radiation pyrometer is intended to receive maximum amount of radiant energy at wide range of wavelengths possible.

2. Selective Radiation Pyrometry:

This involves the measurement of spectral radiant intensity of the radiated energy from a heated body at a given wavelength. For example, if a vertical line is drawn in Fig. the variation of intensity with temperature for given wavelength can be found. The optical pyrometer uses this principle.

Total Radiation Pyrometers

The total radiation pyrometers receives all the radiations from a hot body and focuses it on to a sensitive temperature transducer like thermocouple, resistance thermometer etc. It consists of a radiation-receiving element and a measuring device to indicate the temperature. The most common type is shown in the Fig. A lens is used to concentrate the total radiant energy from the source on to the temperature sensing element. The diaphragms are used to prevent reflections. When lenses are used, the transmissibility of the glass determines the range of frequencies passing through. The transmission bands of some of the lens materials are shown in the Fig. The radiated energy absorbed by the receiver causes a rise of temperature. A balance is established between the energy absorbed by the receiver and that dissipated to the surroundings. Then the receiver equilibrium temperature becomes the measure of source temperature, with the scale established by calibration.

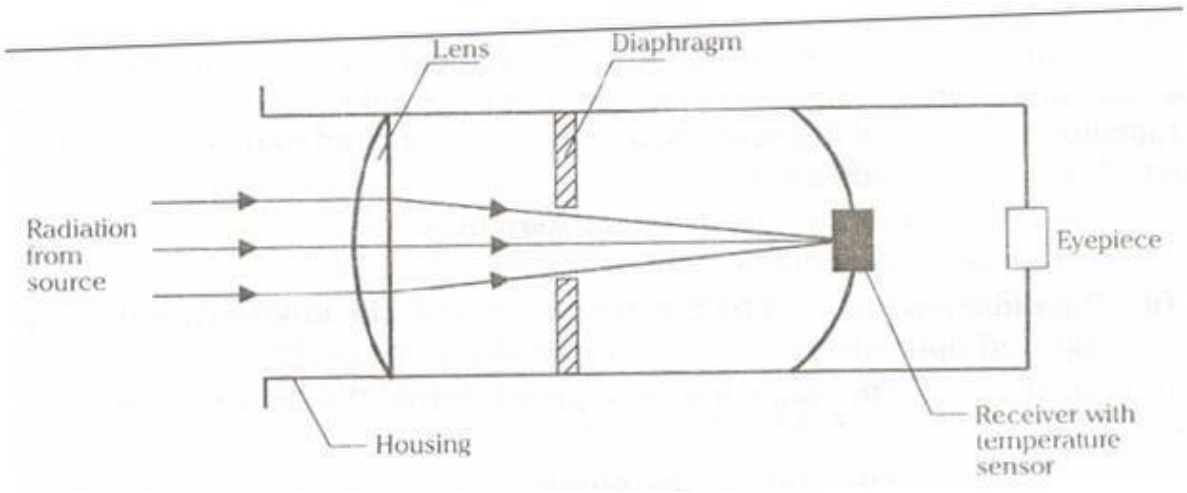

Schematic of Lens Type Radiation Receiving Device

The mirror type radiation receiver is another type of radiation pyrometer as shown in the Fig. Here the diaphragm unit along with a mirror is used to focus the radiation onto a receiver. The distance between the mirror and the receiver may be adjusted for proper focus. Since there is no lens, the mirror arrangement has an advantage a absorption and reflection effects are absent.

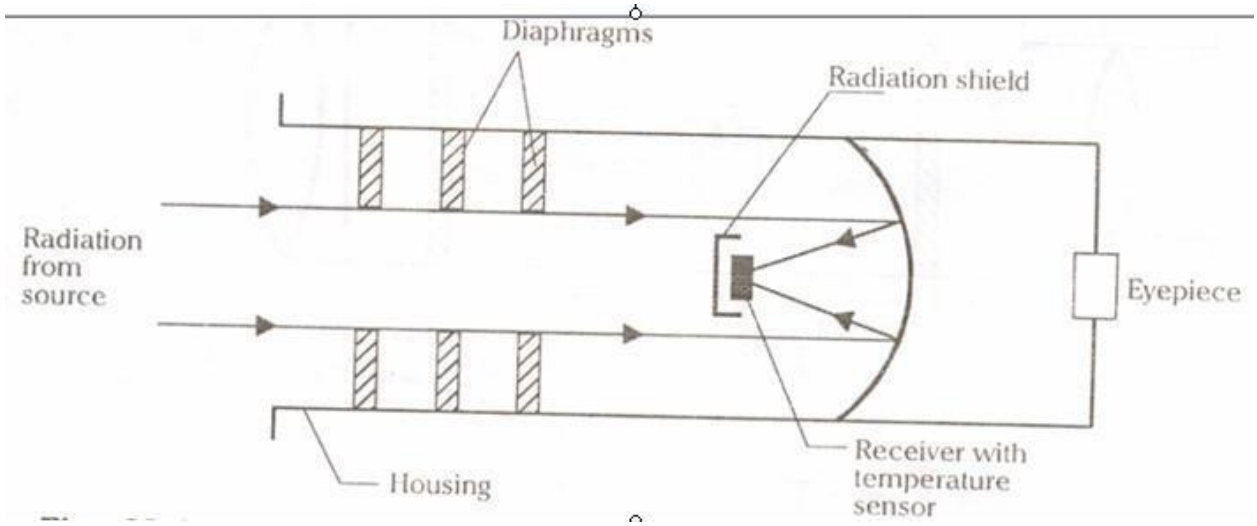

Mirror Focussing Type Radiation Receiving Device

Although radiation pyrometers may theoretically be used at any reasonable distance from a temperature source, there are practical limitations.

i) The size of target will largely determine the degree of temperature averaging, and in general, the greater the distance from the source, the greater the averaging.

ii) The nature of the intervening atmosphere will have a decided effect on the pyrometer indication. If smoke, dust or certain gases present considerable energy absorption may occur.

This will have a particular problem when such absorbents are not constant, but varying with time. For these reasons, minimum practical distance is recommended.

Optical pyrometers

Optical pyrometers use a method of matching as the basis for their operation. A reference temperature is provided in the form of an electrically heated lamp filament, and a measure of temperature is obtained by optically comparing the visual radiation from the filament with that from the unknown own source. In principle, the radiation from one of the sources, as viewed is adjusted to match with that from the other source. The two methods used are :

i) The current through the filament may be controlled electrically with the help of resistance adjustment or

ii) The radiation received by the pyrometer from the unknown source may be adjusted optically by means of some absorbing devices.

In both the cases the adjustment required, forms the means of temperature measurement. The variable intensity optical pyrometer is, as shown in the Fig. The pyrometer is positioned towards an unknown temperature such that the objective lens focuses the source· in the plane of the lamp filament.

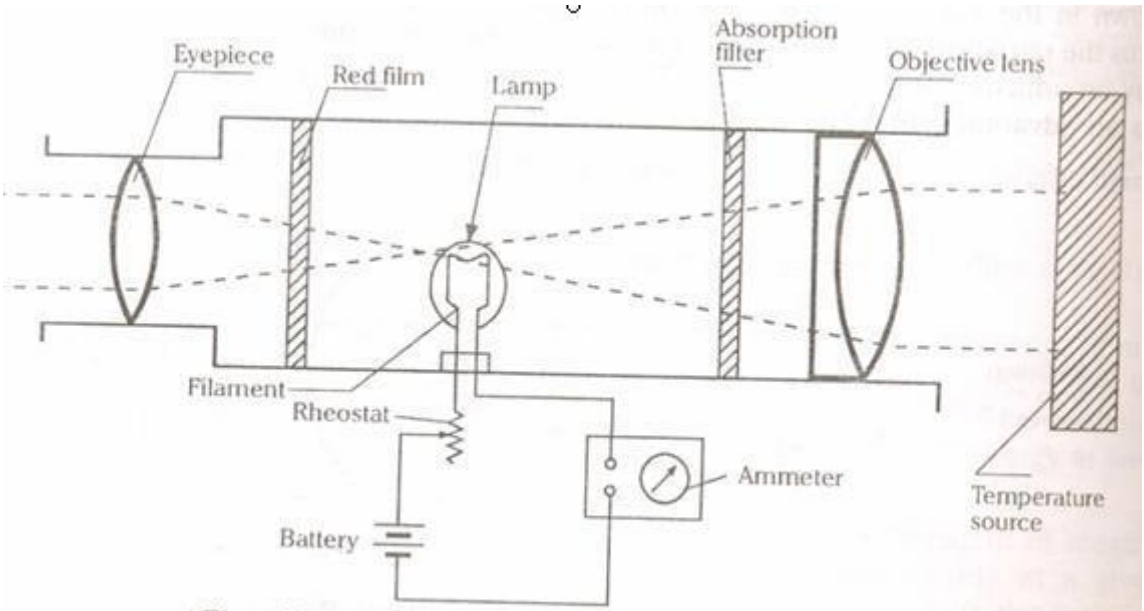

Fig. 12.13 Schematic of an Optical Pyrometer

The eyepiece is then adjusted such that the filament and the source appear superimposed. The filament may appear either hotter or colder than the unknown source as shown in the Fig.The current through the filament is adjusted by means of rheostat.

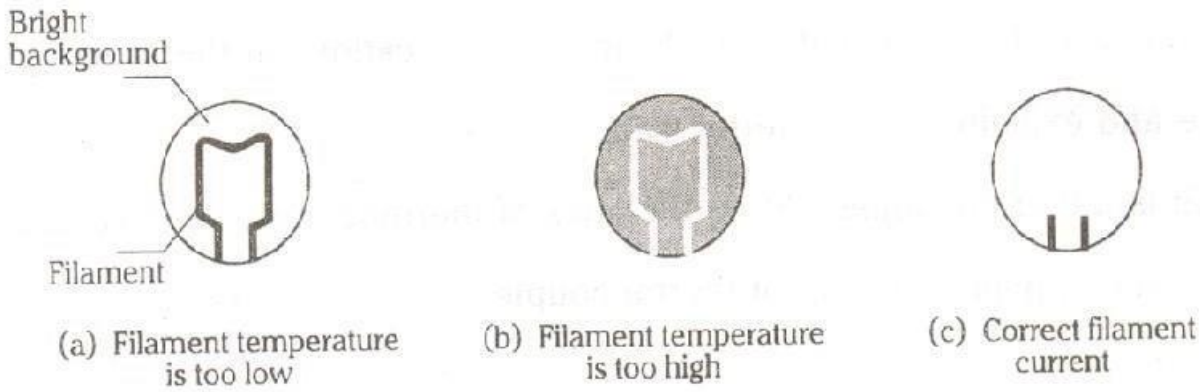

Filament Appearance

When the current passing through the filament is too low, the filament will emit radiation of lesser intensity than that of the source, it will thus appear dark against a bright background as in Fig. (a). When the current is too high it will appear brighter than the background as in Fig. (b). But when correct current is passed through the filament. The filament "disappears" into the background as in Fig. because it is radiating at the some intensity as the source. In this way the current indicated by the ammeter which disappears the filament may be used as the measure of temperature. The purpose of the red filter is to obtain approximately monochromatic conditions, while an absorption filter is used so that the filament may be operated at reduced intensity.

5.9 Strain Measurements

When a system of forces or loads act on a body, it undergoes some deformation. This deformation per unit length is known as **unit strain** or simply a strain mathematically

Strain € = δl /l where, δl = change in length of the body

l= original length of the body.

If a net change in dimension is required, then the term, **total strain** will be used. Since the strain applied to most engineering materials are very small they are expressed in **"micro strain"**

Strain is the quantity used for finding the stress at any point. For measuring the strain, it is the usual practice to make measurements over shortest possible gauge lengths. This is because, the measurement of a change in given length does not give the strain at any fixed point but rather gives the average value over the length. The strain at various points might be different depending upon the strain gradient along the gauge length, then the average strain will be the point strain at the middle point of the gauge length. Since, the change in length over a small gauge length is very small, a high magnification system is required and based upon this, the strain gauges are classified as follows:

i) Mechanical strain gauges

ii) Optical strain gauges

iii) Electrical strain gauges

Mechanical Strain Gauges

This type of strain gauges involves mechanical means for magnification. Extensometer employing compound levers having high magnifications was used. Fig. shows a simple mechanical strain gauge. It consists of two gauge points which will be seated on the specimen whose strain is to be measured. One gauge point is fixed while the second gauge paint is connected to a magnifying lever which in turn gives the input to a dial indicator. The lever magnifies the displacement and is indicated directly on the calibrated dial indicator. This displacement is used to calculate the strain value. The most commonly used mechanical strain gauges are Berry-type and Huggen berger type. The Berry extensometer as shown in the Fig. is used for structural applications in civil engineering for long gauge lengths of up to 200 mm.

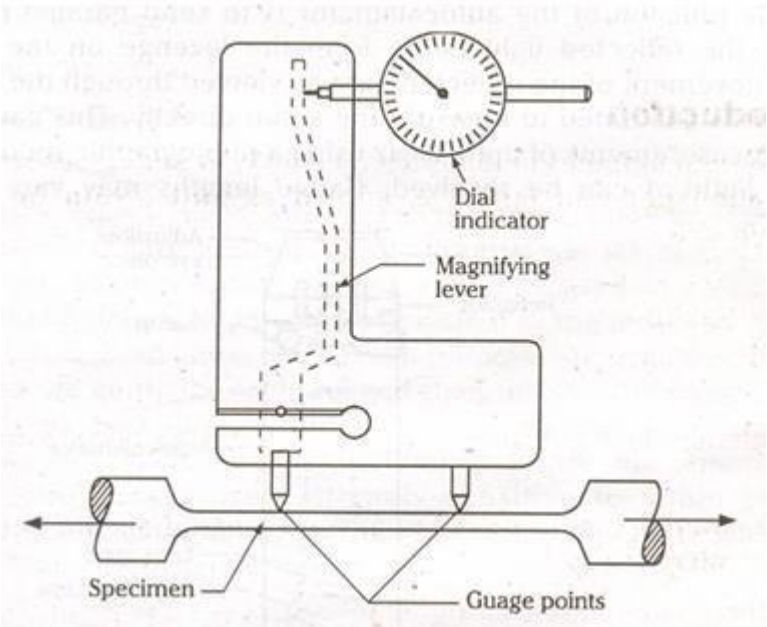

Mechanical Strain Gauge (Berry Extensometer)

Advantages

1. It has a self contained magnification system.

2. No auxiliary equipment is needed as in the case of electrical strain gauges.

Disadvantages

1. Limited only to static tests.

2. The high inertia of the gauge makes it unsuitable for dynamic measurements and varying strains.

3. The response of the system is slow and also there is no method of recording the readings automatically.

4. There should be sufficient surface area on the test specimen and clearance above it in order to accommodate the gauge together with its mountings.

OUTCOME

Students will be able to

1. Learn the concepts of force, torque, pressure, temperature measuring devices.

SELF-ASSESSMENT QUESTIONS

1. With a neat sketch explain force measuring devices.
2. With a neat sketch explain torque measuring devices.
3. With a neat sketch explain pressure measuring devices.
4. With a neat sketch explain temperature measuring devices.

FURTHER READING

1. Jain R. K., 1997, Engineering Metrology, Khanna Publishers.
2. Shawne A. K., 1998, Mechanical Measurement and Instrumentation, Dhanpat Rai and Co. (P) Ltd.
3. Hazra Chowdhury, 1995, Workshop Technology, Media Promoters and Publishers Pvt. Ltd