(20A04101T) ELECTRONIC DEVICES & CIRCUITS

Dr.G.ELAIYARAJA.,M.E.Ph.D

Professor

Department of ECE

VEMU Institute of Technology,

P.Kothakota,Chittoor,AP.

Unit- 3

- BJT Circuits at DC
- Applying the BJT in Amplifier Design
  - Voltage Amplifier
  - Voltage Transfer Characteristic (VTC)
  - Small-Signal Voltage Gain
  - Determining the VTC by Graphical Analysis
  - Q-POINT
- Small-Signal Operation and Models
  - **Transconductance**
  - **Input Resistance** at the Base
  - **Input Resistance** at the Emitter
  - **Voltage Gain**
  - Separating the Signal and the DC Quantities
  - The **Hybrid-π Model**
  - the **T Model**

- Basic BJT Amplifier Configurations
  - Common-Emitter (CE) amplifier without and with emitter resistance
  - Common-Base (CB) amplifier
  - Common-Collector (CC) amplifier or Emitter Follower
- Biasing in BJT Amplifier Circuits
  - Fixed bias
  - Self bias
  - Voltage Divider Bias Circuits
- Biasing using a Constant-Current Source
- CE amplifier – Small Signal Analysis and Design
- Transistor breakdown and Temperature Effects
- Problem solving.

BJT

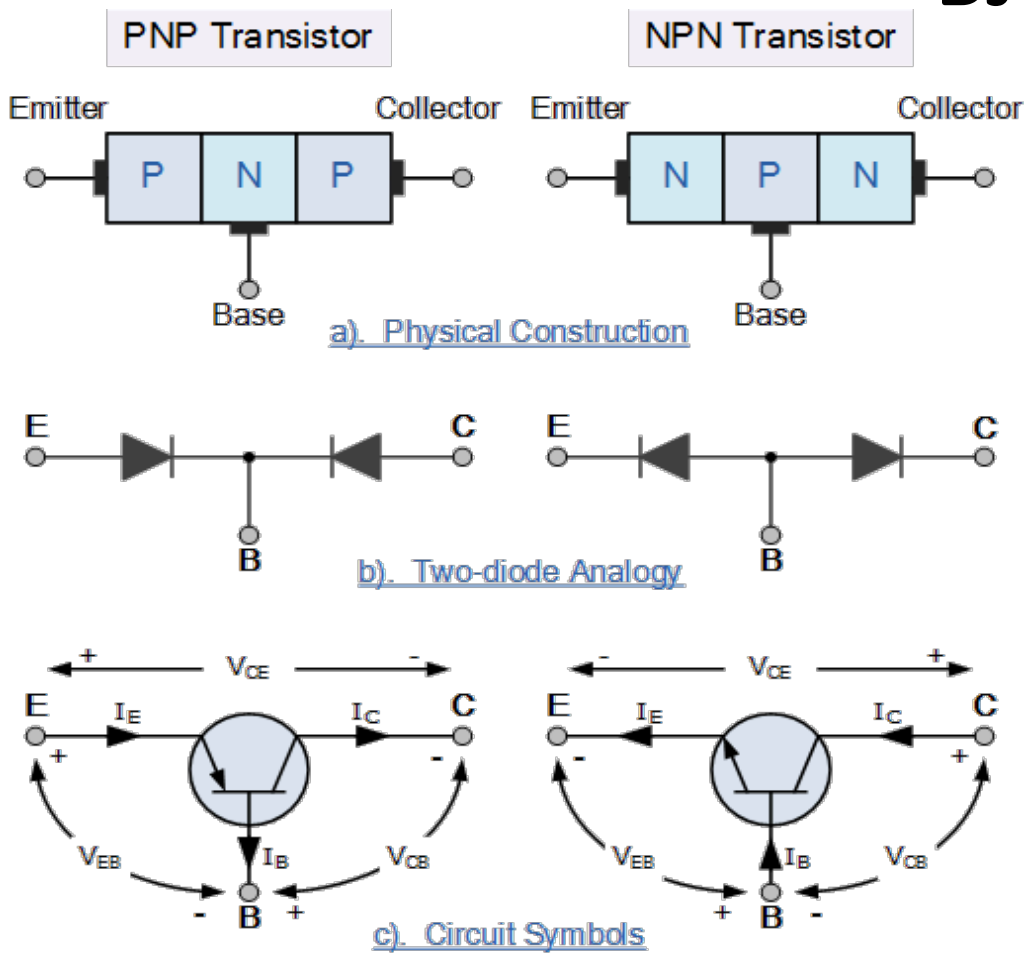
PNP Transistor
NPN Transistor
Emitter
Collector
P
N
P
N
P
N
Base
a). Physical Construction
E
C
B
b). Two-diode Analogy
VCE
IE
IC
VEB
IB
VCB
c). Circuit Symbols

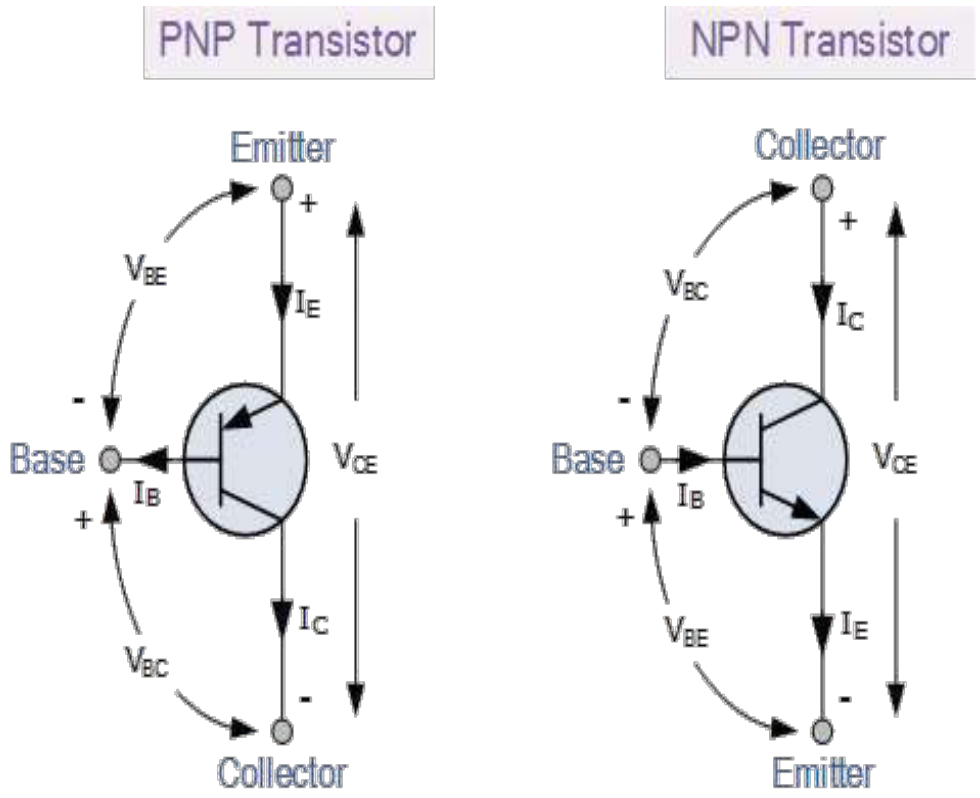
PNP Transistor
NPN Transistor
Emitter
Collector
Base
VBE
VBC
VCE
IE
IC
IB

BJT

<u>Operation Modes of BJT</u>

***Active mode**

***Saturation mode**

***Cutoff mode**

Mode	EBJ	CBJ
Cutoff	Reverse	Reverse
Active	Forward	Reverse
Saturation	Forward	Forward

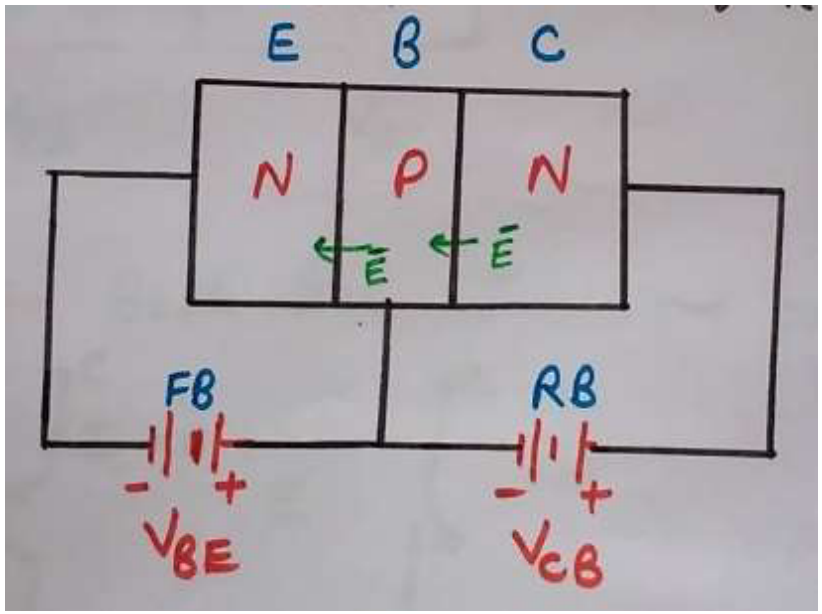

Active Mode Operation of BJT Transistor(NPN BJT)

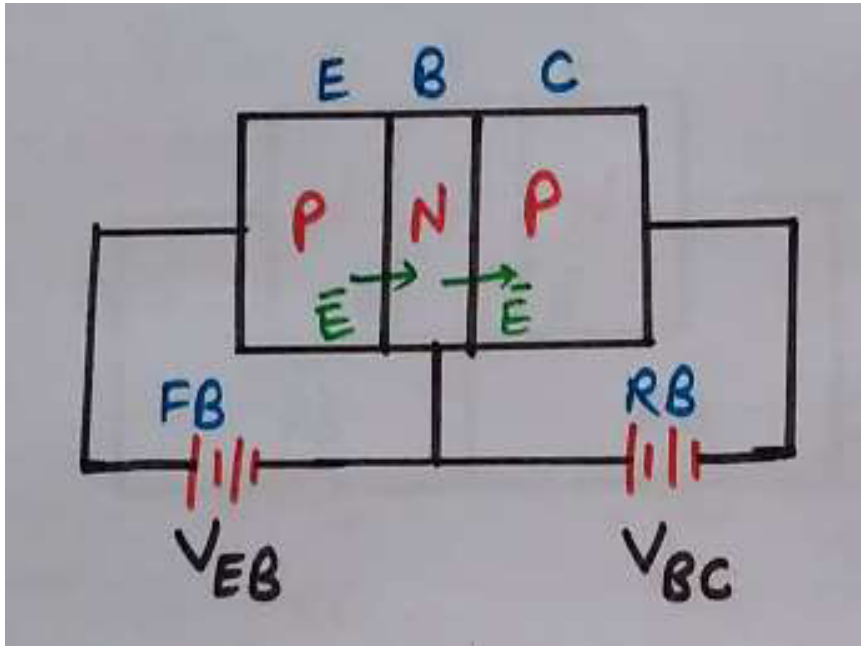

Active Mode Operation of PNP BJT

BJT

Operation Modes of BJT

***Active mode**

***Saturation mode**

***Cutoff mode**

Mode	EBJ	CBJ
Cutoff	Reverse	Reverse
Active	Forward	Reverse
Saturation	Forward	Forward

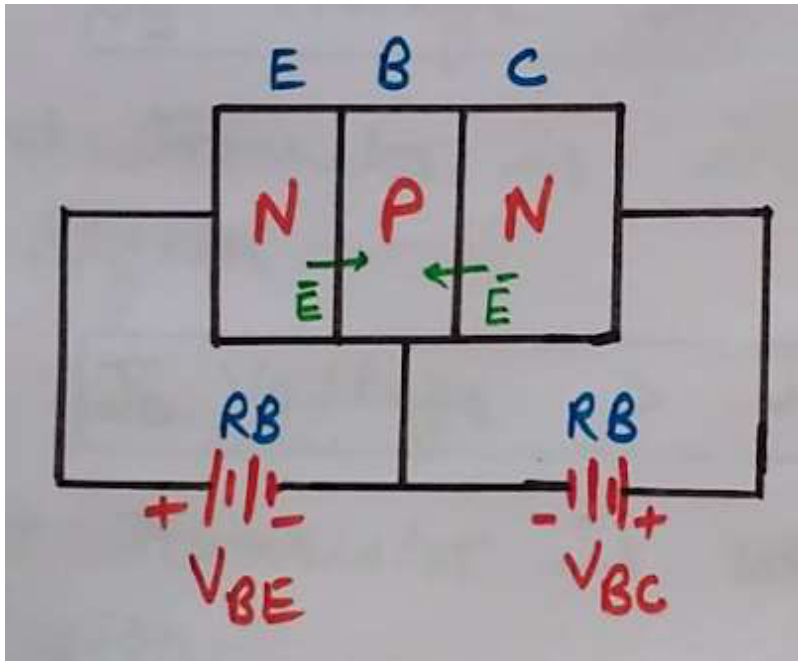

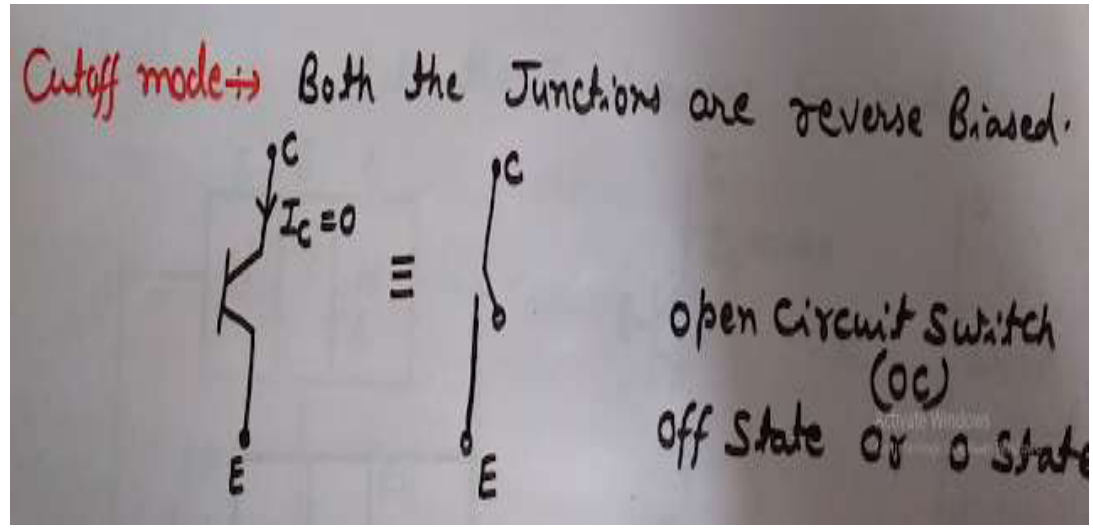

Cut off Mode Operation of BJT