DEMONSTRATION

on

DIGITAL COMMUNICATION SYSTEM LAB

By

Mrs. B. Saroja
Associate Professor
DEPT. OF E.C.E, VEMU IT CHITTOOR

Topics to be discussed

- Vision, Mission, POs, PSOs & PEOs
- Syllabus & Course Outcomes (COs)
- Over view of DCS
- Major Equipment List
- Lab Physical View
- Dos & Don’t
- Safety Precautions

Vision, Mission, POs, PSOs & PEOs

Vision of the institute

To be a premier institute for professional education producing dynamic and vibrant force of technocrat with competent skills, innovative ideas and leadership qualities to serve the society with ethical and benevolent approach.

Mission of the institute

Mission_1: To create a learning environment with state-of-the art infrastructure, well equipped laboratories, research facilities and qualified senior faculty to impart high quality technical education.

Mission_2: To facilitate the learners to foster innovative ideas, inculcate competent research and consultancy skills through Industry-Institute Interaction.

Mission_3: To develop hard work, honesty, leadership qualities and sense of direction in rural youth by providing value based education.

Vision of the Department

To become a centre of excellence in the field of Electronics and Communication Engineering and produce graduates with Technical Skills, Research & Consultancy Competencies, Life-long Learning and Professional Ethics to meet the challenges of the Industry and evolving Society.

Mission of the Department

Mission_1: To enrich Technical Skills of students through Effective Teaching and Learning practices for exchange of ideas and dissemination of knowledge.

Mission_2: To enable the students with research and consultancy skill sets through state-of-the art laboratories, industry interaction and training on core & multidisciplinary technologies.

Mission_3: To develop and instill creative thinking, Life-long learning, leadership qualities, Professional Ethics and social responsibilities among students by providing value based education.

Programme Educational Objectives (PEOs)

PEO_1: To prepare the graduates to be able to plan, analyze and provide innovative ideas to investigate complex engineering problems of industry in the field of Electronics and Communication Engineering using contemporary design and simulation tools.

PEO_2: To provide students with solid fundamentals in core and multidisciplinary domain for successful implementation of engineering products and also to pursue higher studies.

PEO_3: To inculcate learners with professional and ethical attitude, effective communication skills, teamwork skills, and an ability to relate engineering issues to broader social context at work place.

Programme Outcome (POs)

PO_1: Engineering knowledge: Apply the knowledge of mathematics, science, engineering fundamentals, and an engineering specialization to the solution of complex engineering problems.

PO_2: Problem analysis: Identify, formulate, review research literature, and analyze complex engineering problems reaching substantiated conclusions using first principles of mathematics, natural sciences, and engineering sciences.

PO_3: Design/development of solutions: Design solutions for complex engineering problems and design system components or processes that meet the specified needs with appropriate consideration for the public health and safety, and the cultural, societal, and environmental considerations.

PO_4: Conduct investigations of complex problems: Use research-based knowledge and research methods including design of experiments, analysis and interpretation of data, and synthesis of the information to provide valid conclusions.

PO_5: Modern tool usage: Create, select, and apply appropriate techniques, resources, and modern engineering and IT tools including prediction and modeling to complex engineering activities with an understanding of the limitations.

PO_6: The engineer and society: Apply reasoning informed by the contextual knowledge to assess societal, health, safety, legal and cultural issues and the consequent responsibilities relevant to the professional engineering practice.

PO_7: Environment and sustainability: Understand the impact of the professional engineering solutions in societal and environmental contexts, and demonstrate the knowledge of, and need for sustainable development.

PO_8: Ethics: Apply ethical principles and commit to professional ethics and responsibilities and norms of the engineering practice.

PO_9: Individual and team work: Function effectively as an individual, and as a member or leader in diverse teams, and in multidisciplinary settings.

PO_10: Communication: Communicate effectively on complex engineering activities with the engineering community and with society at large, such as, being able to comprehend and write effective reports and design documentation, make effective presentations, and give and receive clear instructions.

PO_11: Project management and finance: Demonstrate knowledge and understanding of the engineering and management principles and apply these to one's own work, as a member and leader in a team, to manage projects and in multidisciplinary environments.

PO_12: Life-long learning: Recognize the need for, and have the preparation and ability to engage in independent and life-long learning in the broadest context of technological change.

Programme Specific Outcome (PSOs)

PSO_1: Higher Education: Qualify in competitive examinations for pursuing higher education by applying the fundamental concepts of Electronics and Communication Engineering domains such as Analog & Digital Electronics, Signal Processing, Communication & Networking, Embedded Systems, VLSI Design and Control Systems etc..

PSO_2: Employment: Get employed in allied industries through their proficiency in program specific domain knowledge, specialized software packages and Computer programming or become an entrepreneur.

Syllabus & Course Outcomes (COs)

JAWAHARLAL NEHRU TECHNOLOGICAL UNIVERSITY ANANTAPUR

III B.Tech. I-Sem (ECE)

(15A04508) DIGITAL COMMUNICATION SYSTEMS LABORATORY

Course Outcomes (COs)

C318.1 Analyze the PCM, DPCM,DM,ADCM using hardware &software

C318.2 Analyze the different shift keying techniques using hardware &software

C318.3 Explain the time division multiplexing technique

C318.4 Analyze the QAM using signal space analysis

Minimum of Ten Experiments to be conducted (Five from each Part-A & B)

HARDWARE EPERIMENTS (PART-A)

- Time division multiplexing.
- Pulse code modulation.
- Differential pulse code modulation.
- Delta Modulation.
- Frequency shift keying.
- Differential Phase shift Keying.
- QPSK Modulation and Demodulation.

SOFTWARE EXPERIMENTS (PART-B)

Modeling of Digital communications using MATLAB

- Sampling Theorem-Verification.
- Pulse code modulation.
- Differential pulse code modulation.
- Frequency shift keying.
- Phase shift keying.
- Differential Phase shift Keying.
- QPSK Modulation and Demodulation.

VEMU INSTITUTE OF TECHNOLOGY::P.KOTHAKOTA
NEAR PAKALA, CHITTOOR-517112
(Approved by AICTE, New Delhi & Affiliated to JNTUA, Anantapuramu)
Department of Electronics &Communication Engineering

LIST OF EXPERIMENTS TO BE CONDUCTED

HARDWARE EXPERIMENTS

- Time Division Multiplexing
- Pulse Code Modulation
- Delta Modulation
- Frequency Shift Keying
- Differential Phase Shift Keying

SOFTWARE EXPERIMENTS

- Sampling Theorem Verification
- Pulse Code Modulation
- Frequency Shift Keying
- Phase Shift Keying
- QPSK Modulation And Demodulation

ADDITIONAL EXPERIMENTS

- Adaptive differential pulse code modulation Using MATLAB
- Quantization Adaptive Modulation Technique

Communication Basics

- Main purpose of communication is to transfer information from a source to a recipient via a channel or medium.
- Communication systems are found whenever information is to be transmitted from one point to another.
- Basic block diagram of a communication system:

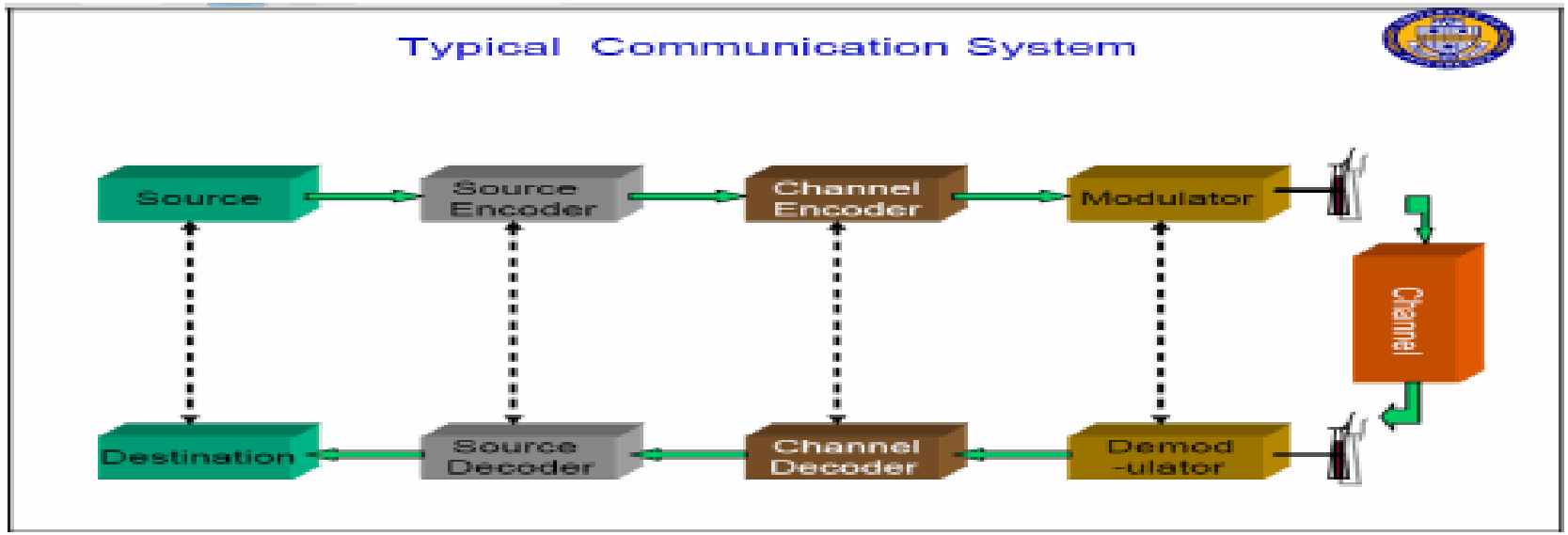

Brief Description

- **Source:** analog or digital
- **Transmitter:** transducer, amplifier, modulator, oscillator, power amp., antenna
- **Channel:** e.g. cable, optical fiber, free space
- **Receiver:** antenna, amplifier, demodulator, oscillator, power amplifier, transducer
- **Recipient:** e.g. person, (loud) speaker, computer

What is Digital Communication?

- Digital Communication is any message passed through digital devices
- Digital communication is any type of information sent digitally.

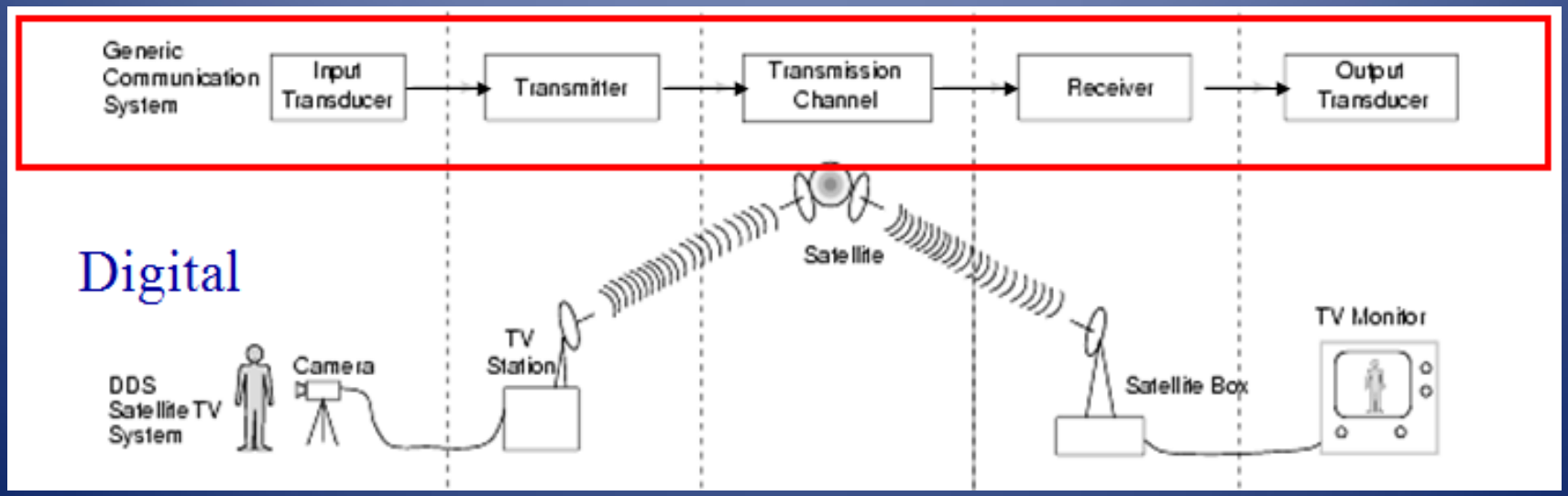

Some examples of digital communication are

- E-mailing
- Texting
- Fax
- Teleconferencing
- Video conferencing

Block Diagram Of Digital Communication

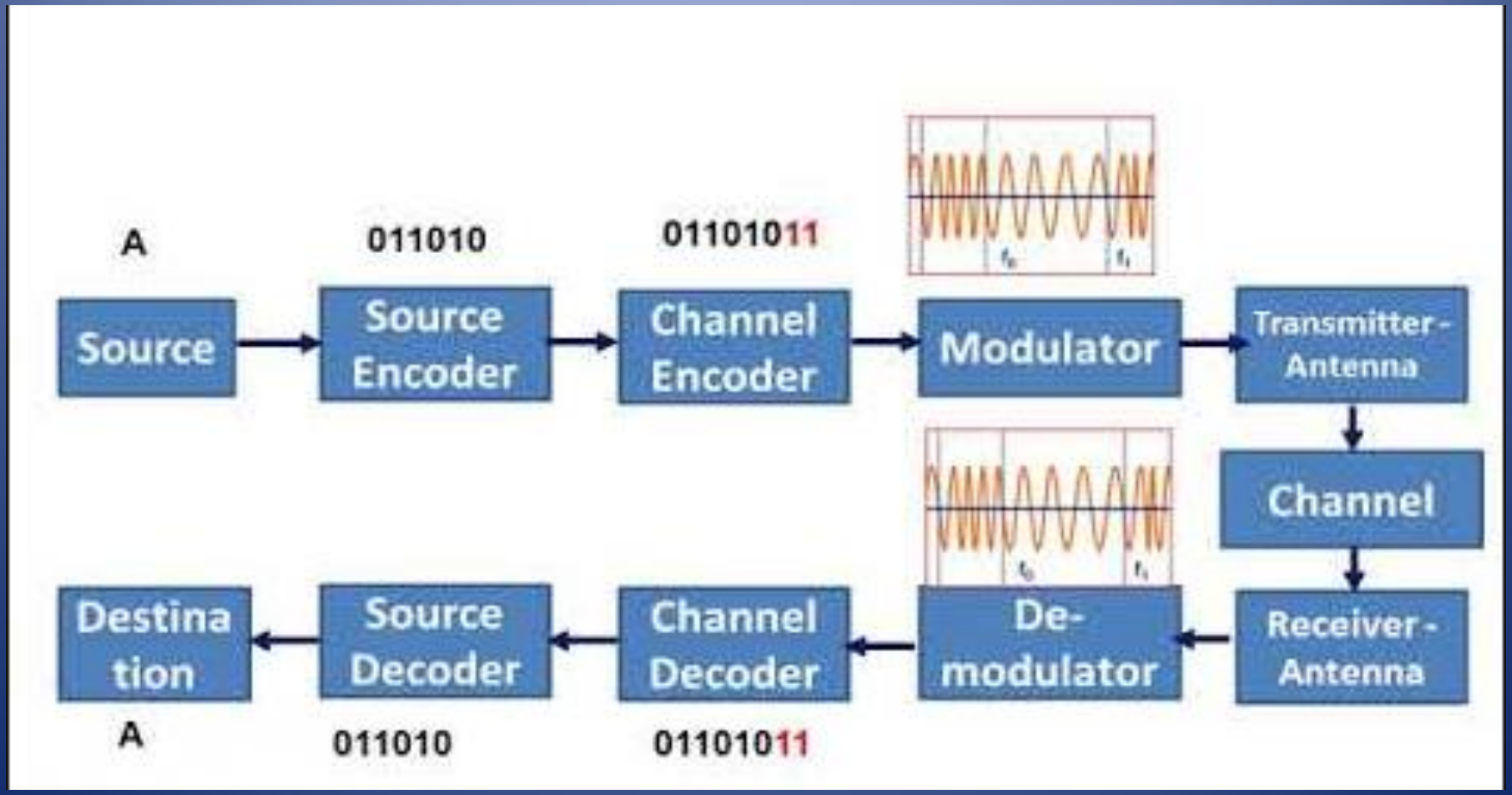

Basic digital communications system

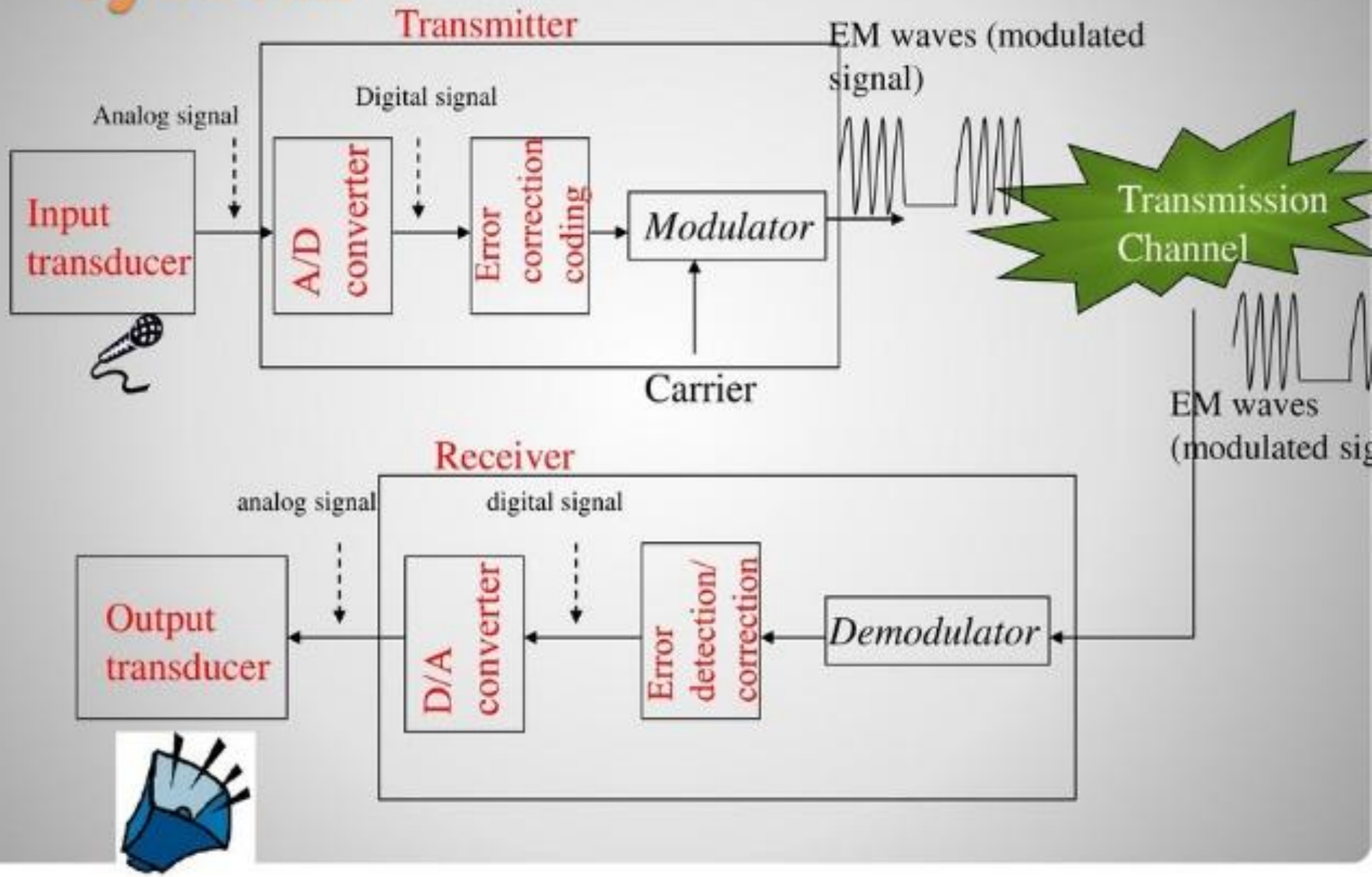

Multiplexing vs. No Multiplexing

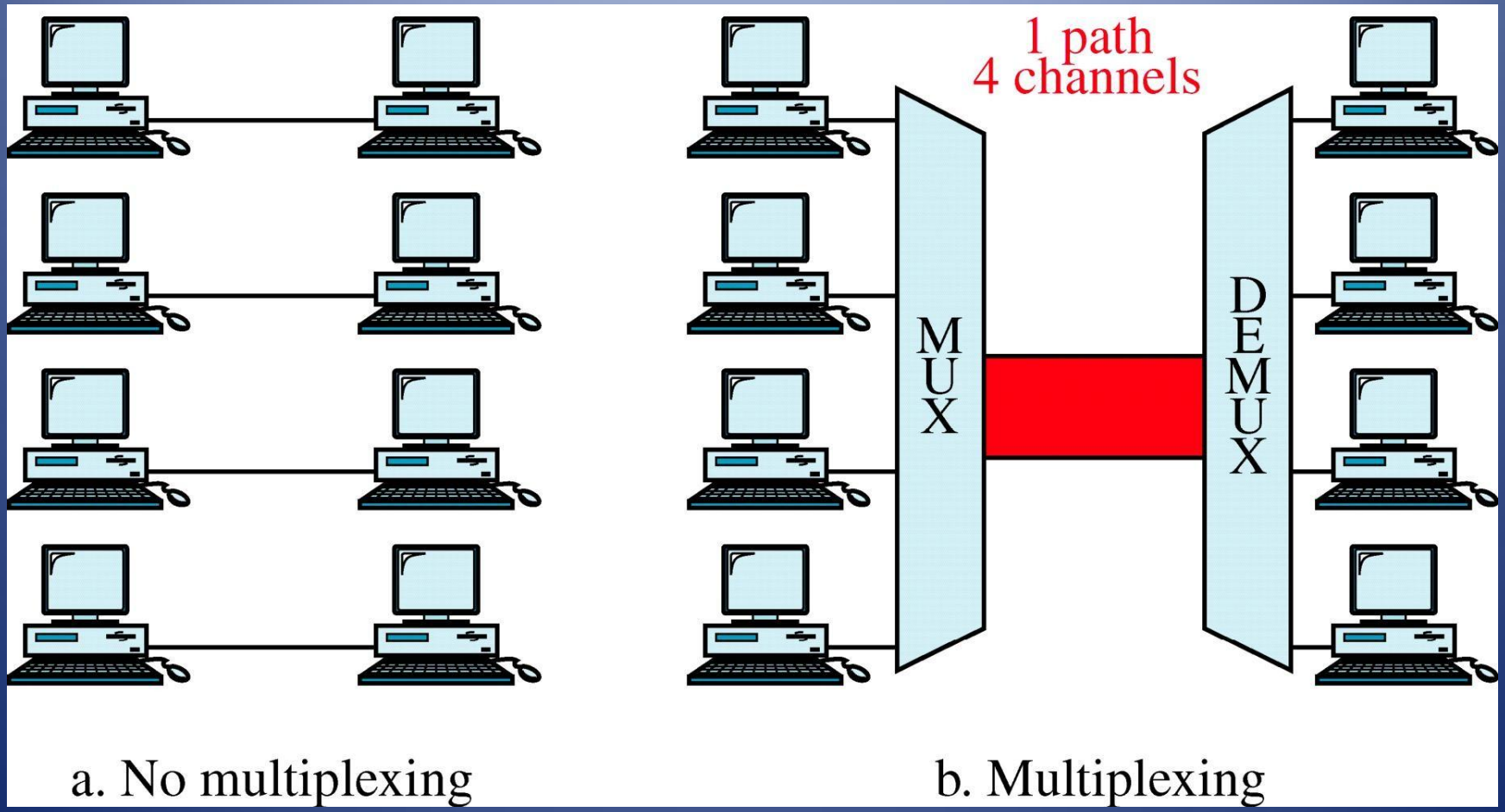

QAM

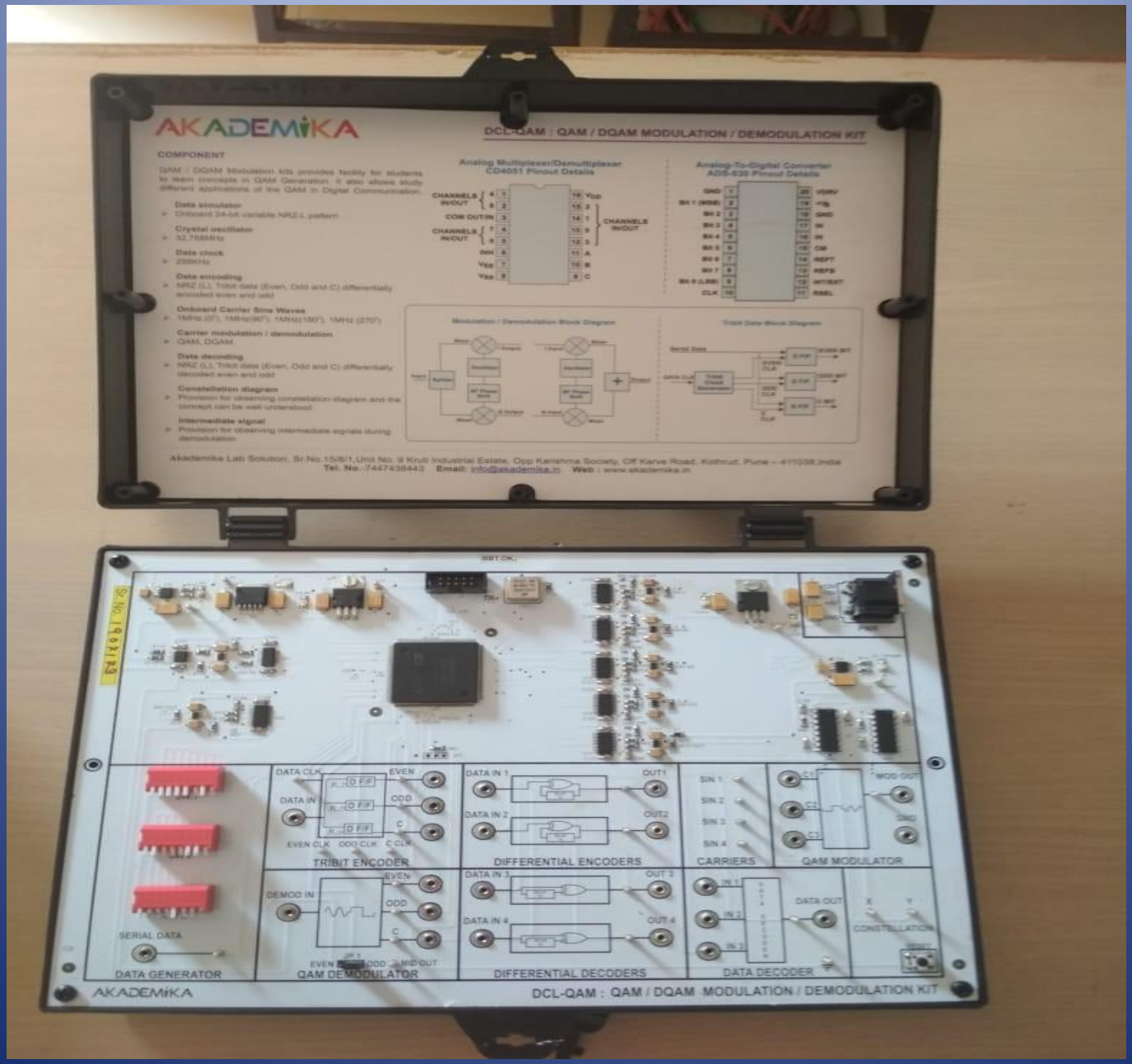
AKADEMIKA
DCL-QAM : QAM / DQAM MODULATION / DEMODULATION KIT
COMPONENT
Analog Multiplexer/Demultiplexer CD4051 Pinout Details
Analog-To-Digital Converter ADC-838 Pinout Details
Modulation / Demodulation Block Diagram
Tribit Data Block Diagram
Akademika Lab Solution, Sr.No.15/6/1,Unit No. 9 Kruti Industrial Estate, Opp Kanishma Society, Off Karve Road, Kothrud, Pune – 411038,India
Tel. No.-7447438443 Email: info@akademika.in Web : www.akademika.in
DATA CLK
DATA IN
EVEN
ODD
C
TRIBIT ENCODER
DATA IN 1
DATA IN 2
OUT1
OUT2
DIFFERENTIAL ENCODERS
SIN 1
SIN 2
SIN 3
SIN 4
CARRIERS
QAM MODULATOR
DEMOD IN
QAM DEMODULATOR
DATA IN 3
DATA IN 4
OUT 3
OUT 4
DIFFERENTIAL DECODERS
DATA OUT
CONSTELLATION
DATA DECODER
SERIAL DATA
DATA GENERATOR
AKADEMIKA
DCL-QAM : QAM / DQAM MODULATION / DEMODULATION KIT

QUANTIZING

- The process of measuring the numerical values of the samples and giving them a table value in a suitable scale.
- The finite number of amplitude intervals is called the ‘quantizing interval’ like quantizing interval no.1 is 10-20mV; 2 is 20-30mV etc. in a case of 1V signal.
- Linear quantizing is where the quantizing intervals are of the same size.
- Quantization intervals are coded in binary form, and so the quantization intervals will be in powers of 2.
- In PCM, 8 bit code is used and so we have 256 intervals for quantizing (128 levels in the positive direction and 128 levels in negative direction)

BIT RATE AND BANDWIDTH REQUIREMENTS OF PCM

- The bit rate of a PCM signal can be calculated form the number of bits per sample x the sampling rate

$$\text{Bit rate} = n_b \times f_s$$

- The bandwidth required to transmit this signal depends on the type of line encoding used. Refer to previous section for discussion and formulas.

- A digitized signal will always need more bandwidth than the original analog signal. Price we pay for robustness and other features of digital transmission.

Digital modulation

- If the variation in the parameter of the carrier is discrete then it is termed as digital modulation technique. It is classified as:

1. Amplitude Shift Keying
2. Frequency Shift Keying
3. Phase Shift Keying

QPSK

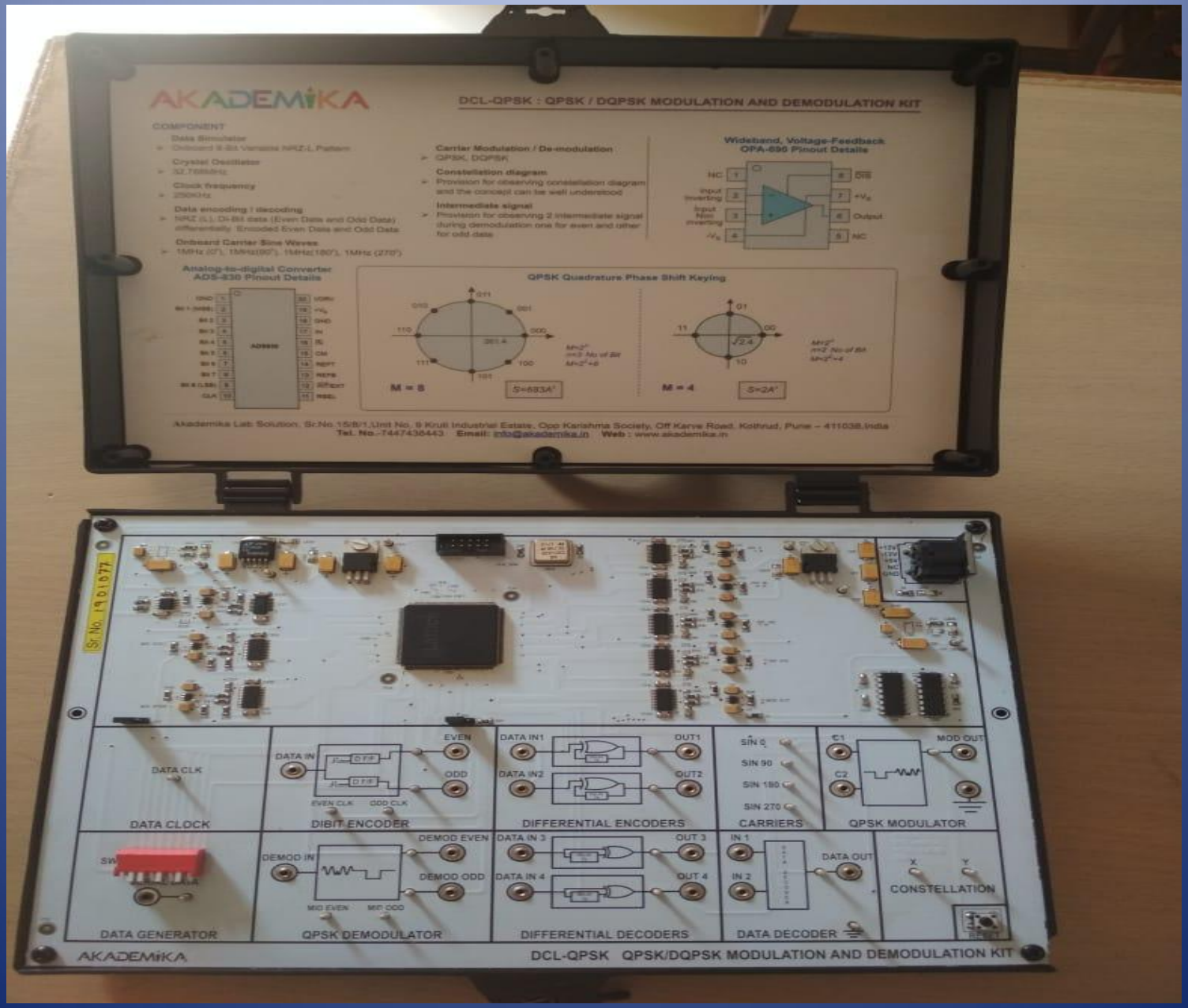
AKADEMIKA
DCL-QPSK : QPSK / DQPSK MODULATION AND DEMODULATION KIT
COMPONENT
Data Simulator
Crystal Oscillator
Clock frequency
Data encoding / decoding
Onboard Carrier Sine Waves
Carrier Modulation / De-modulation
QPSK, DQPSK
Constellation diagram
Intermediate signal
Wideband, Voltage-Feedback OPA-690 Pinout Details
Analog-to-digital Converter ADS-830 Pinout Details
QPSK Quadrature Phase Shift Keying
M = 8
M = 4
Akademika Lab Solution, Sr.No.15/B/1,Unit No. 9 Kruti Industrial Estate, Opp Kariahma Society, Off Karve Road, Kothrud, Pune – 411038,India
Tel. No.-7447438443 Email: info@akademika.in Web : www.akademika.in
DATA CLOCK
DIBIT ENCODER
DIFFERENTIAL ENCODERS
CARRIERS
QPSK MODULATOR
DATA GENERATOR
QPSK DEMODULATOR
DIFFERENTIAL DECODERS
DATA DECODER
CONSTELLATION
AKADEMIKA
DCL-QPSK QPSK/DQPSK MODULATION AND DEMODULATION KIT

QUADRATURE PHASE-SHIFT KEYING (QPSK)

- **QPSK** is a form of phase modulation technique, in which two information bits (combined as one symbol) are modulated at once, selecting one of the four possible carrier phase shift states

- Multilevel Modulation Technique: 2 bits per symbol
- More spectrally efficient, more complex receiver.
- Two times more bandwidth efficient than BPSK

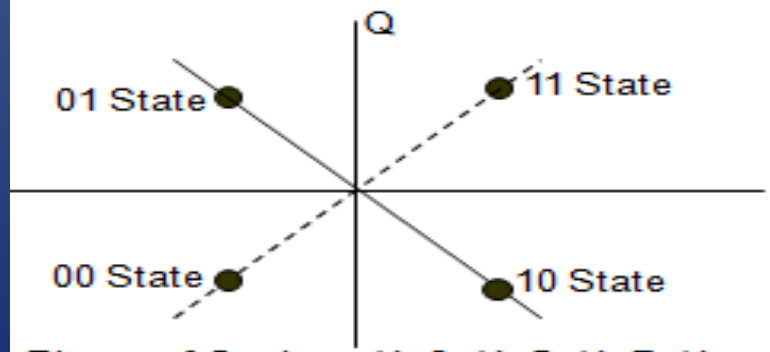

Phase of Carrier: $\pi/4$, $2\pi/4$, $5\pi/4$, $7\pi/4$

$$s(t) = \begin{cases} A\cos\left(2\pi f_c t + \frac{\pi}{4}\right) & 11 \\ A\cos\left(2\pi f_c t + \frac{3\pi}{4}\right) & 01 \\ A\cos\left(2\pi f_c t - \frac{3\pi}{4}\right) & 00 \\ A\cos\left(2\pi f_c t - \frac{\pi}{4}\right) & 10 \end{cases}$$

QPSK modulation

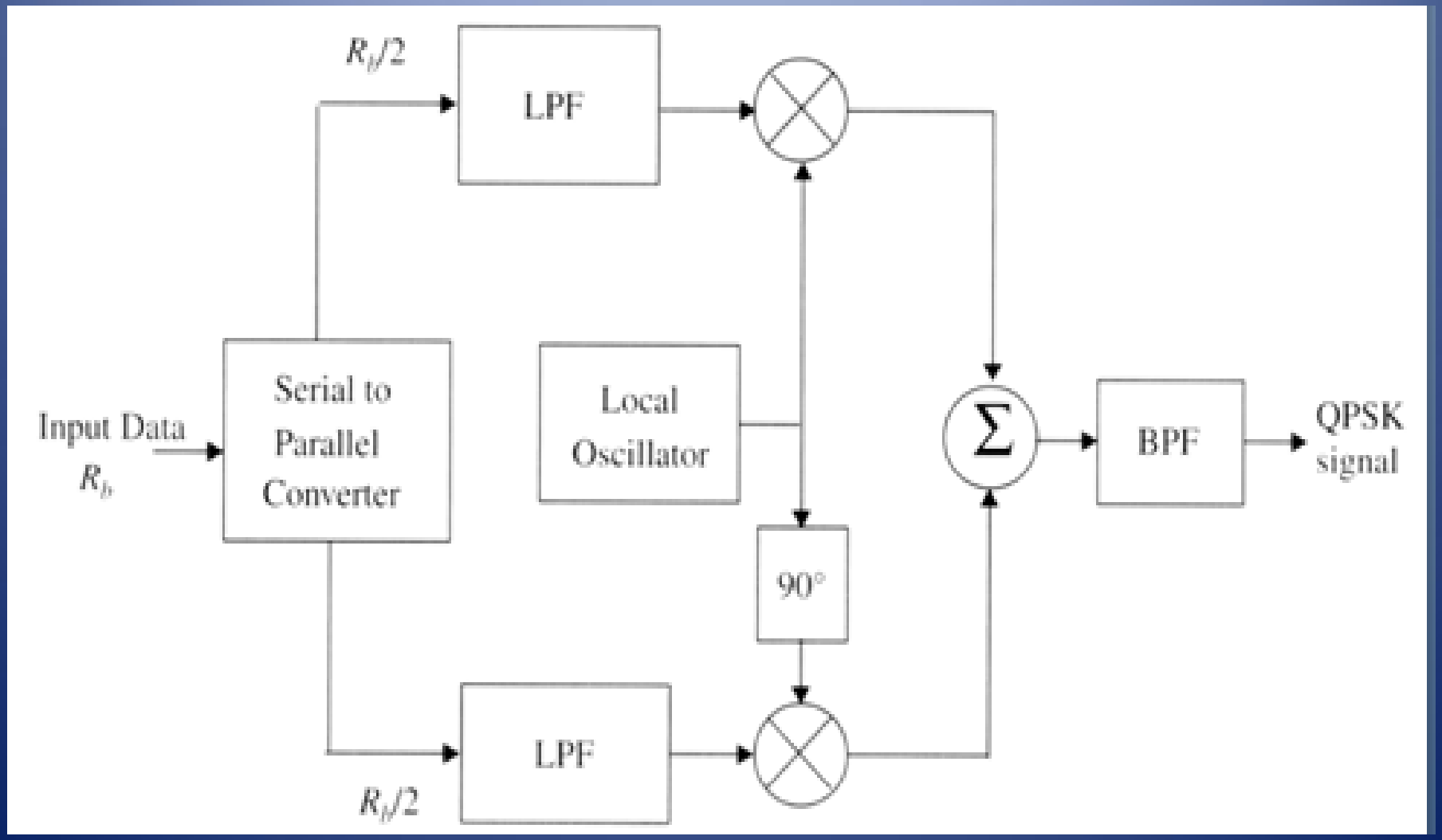

QPSK receiver

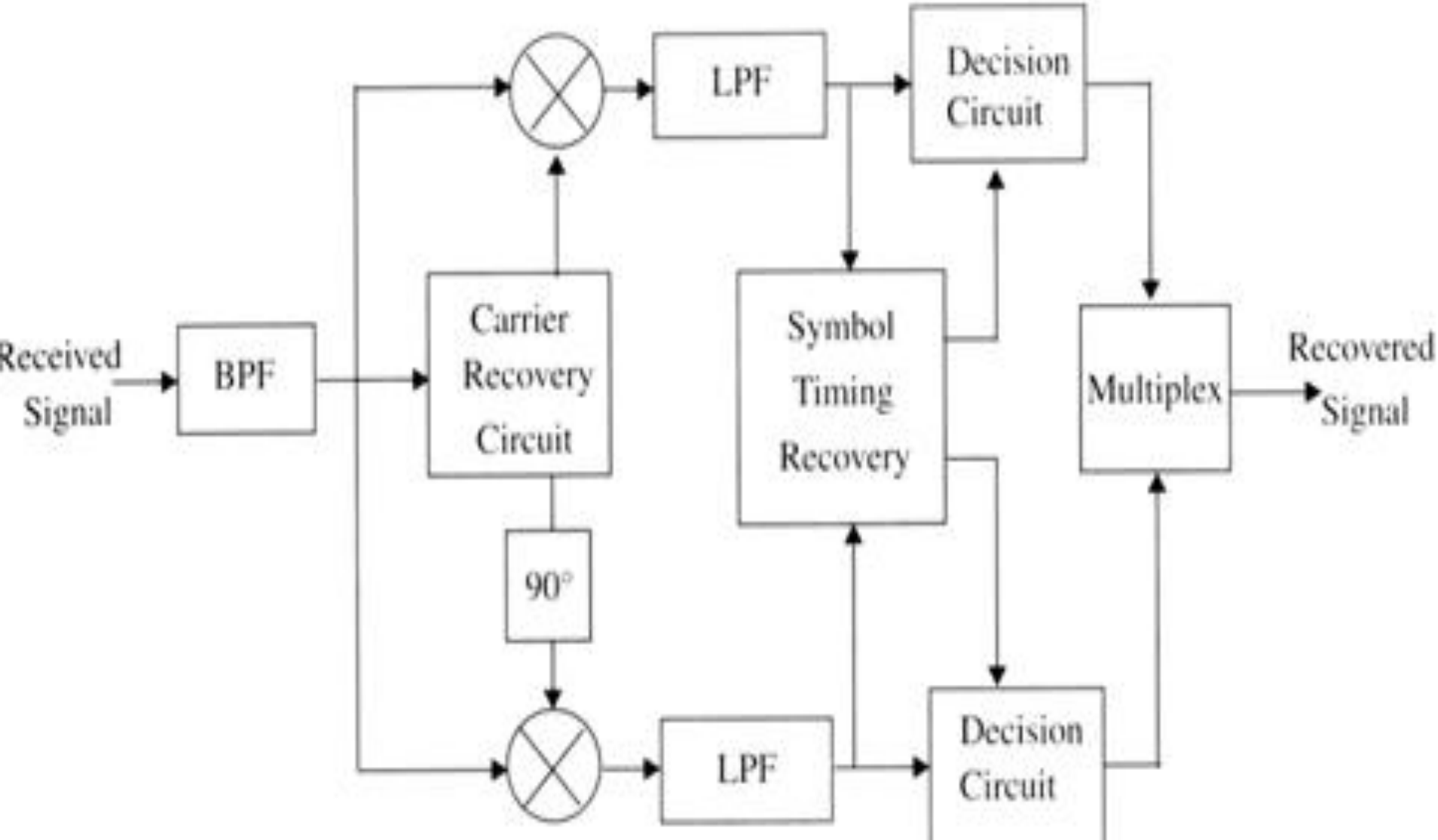

QPSK Waveform

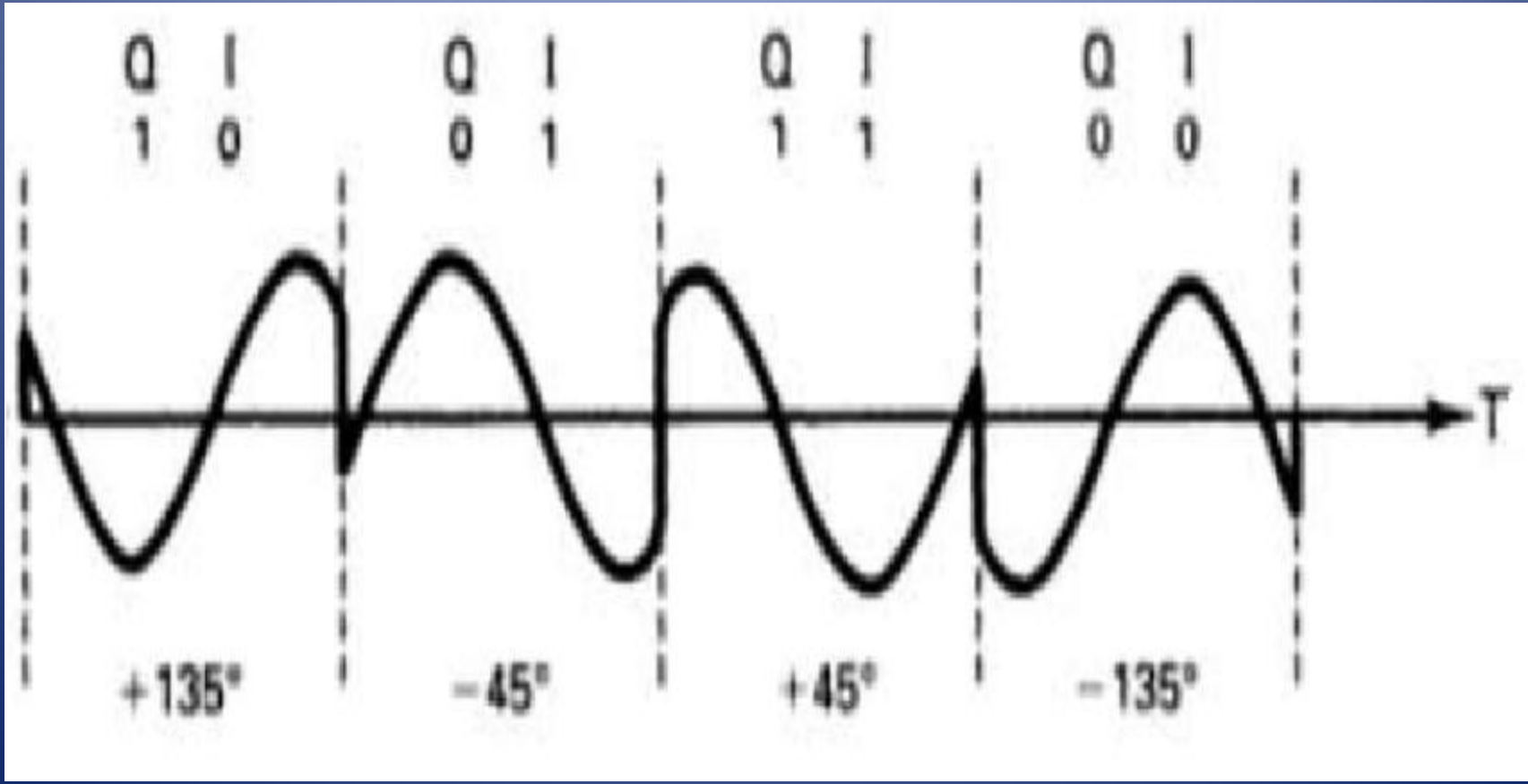

Digital Oscilloscope

- A **digital oscilloscope** is a complex electronic device composed of various software and electronic hardware modules that work together to capture, process, display and store data that represents the signals of interest of an operator

MATLAB

- MATRIX LABORATORY is a high level Programming language which has many specialized *toolboxes* for making things easier for us.
- Powerful, general-purpose system or environment for doing mathematics, scientific and engineering calculations.
- "High-Performance Numeric Computation and Visualization Software" package.

MATLAB Desktop

- Command window
- Command history
- Workspace
- Current directory
- Editor window
- Figure window

Matlab Desktop

MATLAB 7.8.0 (R2009a)

File Edit View Graphics Debug Parallel Desktop Window Help

Current Directory: C:\Documents and Settings\user\My Documents\MATLAB

Shortcuts How to Add What's New

Current Directory

« MATLAB ▸

Name	Date Modified
operation...	8/2/10 12:43 AM
Thumbs.db	8/2/10 12:37 AM
operation...	8/2/10 12:11 AM
soundtest.m	8/1/10 9:32 PM
watershe...	7/29/10 8:22 PM
watershe...	7/29/10 8:18 PM
watershe...	7/29/10 8:18 PM
watershe...	7/29/10 8:17 PM
main1.m	7/24/10 7:00 PM
imagedem...	7/24/10 3:40 PM
imagedem...	7/24/10 3:38 PM
nak1.m	7/18/10 7:18 PM
nak1.asv	7/18/10 7:16 PM
dvbofdm1.m	7/18/10 5:55 PM
dvbofdm1...	7/18/10 5:46 PM
ofdmdvb5.m	7/18/10 4:45 PM
ofdmdvb4.m	7/18/10 4:23 PM
ofdmdvb3...	7/18/10 1:23 PM
ofdmdvb....	7/18/10 1:23 PM
ofdmdvb3.m	7/18/10 1:17 PM
ofdmdvb2.m	7/18/10 11:29 AM
main1.asv	7/17/10 7:03 PM
func_vd_...	7/17/10 7:02 PM
func_vd_...	7/17/10 7:01 PM
func_vd_...	7/17/10 7:00 PM
ezw.zip	7/17/10 8:35 AM
4.wav	7/16/10 11:22 PM

Details

Select a file to view details

Command Window

New to MATLAB? Watch this Video, see Demos, or read Getting Started.

```
  Columns 59995 through 60000

    5.9994    5.9995    5.9996    5.9997    5.9998    5.9999

  Column 60001

    6.0000

>> t = 0:1/1000:2;
y = chirp(t,0,1,150);

%To plot the spectrogram, use
figure,plot(y)

spectrogram(y,256,250,256,1000,'yaxis')
>> close all
>> t = 0:1/1000:2;
y = chirp(t,0,1,150);

%To plot the spectrogram, use
figure,plot(y)

spectrogram(y,256,250,256,1000,'yaxis')
>> x = linspace(-5,5);
y = sinc(x);
plot(x,y)
>> x = linspace(0,4*pi,300);
plot(x,diric(x,7)); axis tight;
plot(x,diric(x,8)); axis tight;
>> x = linspace(0,4*pi,300);
figure,plot(x,diric(x,7)); axis tight;
figure,plot(x,diric(x,8)); axis tight;
>> x = linspace(0,4*pi,300);
figure,plot(x,diric(x,7));
figure,plot(x,diric(x,8));
>> close all
>>
```

Workspace

Stack: Base

Name	Value	Min
fs	10000	10000
t	<1x2001 double>	0
tc	3.7849e-05	3.784...
x	<1x300 double>	0
y	<1x100 double>	-0.2160
y1	<1x100 double>	0
y2	<1x100 double>	1
y3	<1x60001 double>	0
y4	<1x60001 double>	0
y5	<1x60001 double>	0
y6	<1x60001 double>	-1
y7	<1x200001 double>	-1
yi	<1x76 double>	-0.7370

Command History

```
t = 0:1/1000:2;
y = chirp(t,0,1,150);
%To plot the spectrogram, use
figure,plot(y)
spectrogram(y,256,250,256,1000,'yax
x = linspace(-5,5);
y = sinc(x);
plot(x,y)
x = linspace(0,4*pi,300);
plot(x,diric(x,7)); axis tight;
plot(x,diric(x,8)); axis tight;
x = linspace(0,4*pi,300);
figure,plot(x,diric(x,7)); axis tig
figure,plot(x,diric(x,8)); axis tig
x = linspace(0,4*pi,300);
figure,plot(x,diric(x,7));
figure,plot(x,diric(x,8));
close all
```

Start

start | 2 Firefox | MATLAB 7.8.0 (R2... | Editor - C:\Docume... | viewer (800×600) -... | Microsoft PowerPoi... | 12:45 AM

File Creation & Execution

- File → New → MFile/Script- File
- Debug → Save file and Run (F5)

Some Desktop Commands

- Who – lists variables currently in the workspace
- Whos – lists variables currently in the workspace with their size
- What – lists .m, .mat and .mex files on the disk
- Clear – clears the workspace, all the variables are removed
- Clear all – clears all the variables and functions from the workspace
- Clc – clears the command window, command history is also lost
- Clf – clears the figure window
- Control c – aborts and kills the current command execution

Variables

- All variables are created with *double precision* unless specified and they are matrices.

```
Example:;
>>x1
>>x=5=2;
```

- After these statements, the variables are 1x1 matrices with double precision

Simulation

- A **simulation** is an approximate imitation of the operation of a process or system; that represents its operation over time.
- Simulation is used in many contexts, such as simulation of technology for performance tuning or optimizing, safety engineering, testing, training, education, and video games

Simulation using MATLAB

- MATLAB's Power of Computational Mathematics: MATLAB is used in every facet of computational mathematics.
- Following are some commonly used mathematical calculations where it is used most commonly:
  - Dealing with Matrices and Arrays : perform matrices operations
  - 2-D and 3-D Plotting and graphics.

- Linear Algebra.
- Algebraic Equations.
- Non-linear Functions.
- Statistics.
- Calculus and Differential Equations.
- Numerical Calculations.
- Integration : finding areas
- Transforms: Laplace ,Fourier, Z- Transforms
- Curve Fitting : different types of filters
- Various other special functions

Major Equipments

S.No	Name of the Equipment	Quantity	Amount (Rs.)
1.	Analog Communication Trainer Kits	21	1,12,086/-
2.	Cathode Ray Oscilloscopes (30 MHz)	10	1,53,400/-
3.	Digital Storage Oscilloscopes (25 MHz)	02	36,400/-
4.	Function Generators (3 MHz)	07	26,950/-
5.	Basic Antenna Measurement Trainer Kit	01	67,500/-
6.	Digital Communication Trainer Kits	24	2,02,366/-
7.	Digital Storage Oscilloscopes (100 MHz)	12	2,83,200/-
8.	Regulated Power Supply Digital-Dual (0-30V)	05	20,020/-
Total			**9, 01,922/-**

Lab Physical View

DOs & DON'TS

- Do not displace monitor, keyboard, mouse etc.
- Do not use personal pen drives without permission.
- Students should not attempt to repair, open, tamper or interfere with any of the computer, cabling, or other equipment in the laboratory.

Safety Precautions

- Data will be preserved using UPS Backup.
- Equipped with Fire Extinguishers.
- Students and Faculty are instructed to follow Safety Instructions Chart in the Laboratories.
- Before inserting USB Stick, the Pen drives have to be scanned for any malicious content.
- The Lab is under CC Camera surveillance.
- Keep all the Computers Updated with antivirus software.
- Make Sure the Firewalls are enabled on each and every Computer.
- Miniature Circuit Breaker's (MCB's).
- Students inserting USB Stick have to be scanned for any malicious content.
- Students should not attempt to repair, open, tamper or interfere with any of the computer, cabling, or other equipment in the laboratory.
- Do not displace monitor, keyboard, mouse etc.
- Do not use personal pen drives without permission.

	
Fire Extinguishers	First Aid Box
	
Miniature Circuit Breaker's (MCB's).	CC Camera surveillance

Table 6.4.2 Safety Measures in the Laboratories

THANK YOU