VEMU INSTITUTE OF TECHNOLOGY:: P.KOTHAKOTA

Chittoor-Tirupathi National Highway, P.Kothakota, Near Pakala, Chittoor (Dt.), AP - 517112
(Approved by AICTE, New Delhi and Affliated to JNTUA, Anantapuramu)

DEPARTMENT OF MECHANICAL ENGINEERING

DESIGN OF MACHINE MEMBERS - 19A03601

B.TECH : III-I SEM

Prepared By

Mr. K. V. SHARATH BABU REDDY

&

Mr. G. SUDARSANA REDDY

JAWAHARLAL NEHRU TECHNOLOGICAL UNIVERSITY ANANTAPUR

UNIT I Introduction, Design for Static and Dynamic loads

Mechanical Engineering Design: Design process, design considerations, codes and standards of designation of materials, selection of materials.

Design for Static Loads: Modes of failure, design of components subjected to axial, bending, torsional and impact loads. Theories of failure for static loads.

Design for Dynamic Loads: Endurance limit, fatigue strength under axial, bending and torsion, stress concentration, notch sensitivity. Types of fluctuating loads, fatigue design for infinite life. Soderberg, Goodman and modified Goodman criterion for fatigue failure. Fatigue design under combined stresses.

UNIT II Design of Bolted and Welded Joints

Design of Bolted Joints: Threaded fasteners, preload of bolts, various stresses induced in the bolts. Torque requirement for bolt tightening, gasketed joints and eccentrically loaded bolted joints.

Welded Joints: Strength of lap and butt welds, Joints subjected to bending and torsion. Eccentrically loaded welded joints.

UNIT III Power transmission shafts and Couplings

Power Transmission Shafts: Design of shafts subjected to bending, torsion and axial loading. Shafts subjected to fluctuating loads using shock factors**.**

Couplings: Design of flange and bushed pin couplings, universal coupling.

UNIT IV Design of Clutches, Brakes and Springs

Friction Clutches: Torque transmitting capacity of disc and centrifugal clutches. Uniform wear theory and uniform pressure theory.

Brakes: Different types of brakes. Concept of self-energizing and self-locking of brake. Band and block brakes, disc brakes.

Springs: Design of helical compression, tension, torsion and leaf springs.

UNITV Design of Bearings and Gears

Design of Sliding Contact Bearings: Lubrication modes, bearing modulus, McKee's equations, design of journal bearing. Bearing Failures.

Design of Rolling Contact Bearings: Static and dynamic load capacity, Stribeck's Equation, equivalent bearing load, load-life relationships, load factor, selection of bearings from manufacturer's catalogue.

Design of Gears: Spur gears, beam strength, Lewis equation, design for dynamic and wear loads.

What is Machine Design?

What is the importance of Machine Design for engineers?

Creation of new and better machines, and Improving Existing Ones so that it is economical in the cost of production and operation.

Definition of Machine Design

1) Machine design is defined as the use of scientific principles, technical information & imagination.

or

2) Machine design is defined as the use of scientific principles, technical information & imagination in the description of a machine or a mechanical system to perform specific functions with maximum economy & efficiency.

Basic Requirement of Machine Elements

Strength and Rigidity

Wear Resistance

Minimum Dimensions & Weight

Manufacturability

Safety

Conformance to standards

Reliability

Maintainability

Minimum Life-cycle Cost

Engineering Materials and their Properties

- Selection of proper material for the machine components is one of the most important steps in process of machine design
- The best material is one which will serve the desired purpose at minimum costs
- Factors Considered while selecting the material:

i) Availability: Material should be readily available in market in large enough quantities to meet the requirement.

ii) Mechanical properties

Manufacturing Considerations:

- In some applications machinability of material is an important consideration in selection
- Where the product is of complex shape, castability or ability of the molten metal to flow into intricate passages is the criterion of material selection
- In fabricated assemblies of plates & rods, weldability becomes the governing factor

Toughness: Ability to absorb energy before fracture takes place

Malleability: Ability to deform to a greater extent before the sign of crack, when it is subjected to compressive force

Ductility: Ability to deform to a greater extent before the sign of crack, when subjected to tensile force

Brittleness: Property of the material which shows negligible plastic deformation fracture takes place

Hardness: Resistance to penetration or permanent deformation

General Procedure in Machine Design

Need or aim

Recognize and specify the problem

Synthesis

Select the mechanism that would give the desired motion and form the basic model with a sketch etc

Analysis of the FORCES

Material selection

Design of elements

Determine the stresses and thereby the sizes of components s.t. failure or deformation does not occur

Modification

Modify sizes to ease construction & reduce overall cost

Detailed drawing

Production

DESIGN CONSIDERATIONS

- Strength
- Rigidity
- Reliability
- Safety
- Cost
- Weight
- Ergonomics
- Aesthetics
- Manufacturing considerations
- Assembly considerations
- Conformance to standards
- Friction and wear
- Life
- Vibrations
- Thermal considerations
- Lubrication
- Maintenance
- Flexibility
- Size and shape
- Stiffness
- Corrosion
- Noise
- Environmental considerations

MANUFACTURING CONSIDERATIONS IN DESIGN

- Minimum total number of parts in a product
- Minimum variety of parts
- Use standard parts
- Use modular design
- Design parts to be multifunctional
- Design parts for multiple use
- Select least costly material
- Design parts for ease of manufacture
- Shape the parts for minimizing the operations

DESIGN CONSIDERATIONS FOR CASTINGS

- Design parts to be in compression then in tension
- Strengthen parts under tension by use of external devices
- Shape the casting for orderly solidification
- Avoid abrupt change in cross-section
- Provide more thickness at the boss
- Round off the corners
- Avoid concentration of metal at junctions
- Avoid thin sections
- Make provision for easy removal of pattern from the mould

DESIGN CONSIDERATIONS FOR FORGINGS

- Keep fibre lines parallel to tensile and compressive forces and perpendicular to shear forces
- Avoid deep machining cuts
- Keep vertical surfaces of forged parts tapered
- Keep the parting line in one plane
- Provide adequate fillet and corner radii
- Avoid thin sections

DESIGN CONSIDERATIONS IN WELDING

- Use the minimum possible number of welds
- Select the same thickness for the parts to be welded together
- Locate the welds at the areas in the design where stresses and/or deflections are not critical
- Effect of shrinkage and distortion should be minimized by post welding annealing and stress relief operations
- Decide proper welding sequence
- Design welding in the flat or horizontal position and not in the overhead position
- Use only the amount of weld metal that is absolutely required

STANDARDIZATION

- It is the process of establishing the set of norms to which a specified set of characteristics of a component or a product should conform
- **Example:** Standardizing the shaft consists of specifying the set of shaft diameters and material

➢ **Objectives of standardization**

- To make the interchangeability of the components possible
- To make the mass production of components easier

PREFERRED SERIES AND ITS SELECTION

- Preferred series are series of numbers obtained by geometric progression and rounded off
- The four basic preferred series are designated as:

R5 Series	$\sqrt[5]{10} = 1.58$
R10 Series	$\sqrt[10]{10} = 1.26$
R20 Series	$\sqrt[20]{10} = 1.12$
R40 Series	$\sqrt[40]{10} = 1.06$

- The other series are called derived series and are obtained by multiplying or dividing the basic sizes by 10, 100, etc.

MECHANICAL PROPERTIES OF MATERIALS

- Strength
- Stiffness/Rigidity
- Elasticity
- Plasticity
- Ductility
- Brittleness
- Malleability
- Toughness
- Machinability
- Resilience
- Creep
- Fatigue
- Hardness

EFFECT OF ALLOYING ELEMENTS

- Chromium
- Nickel
- Manganese
- Silicon
- Molybdenum
- Vanadium
- Tungsten

STEELS DESIGNATED ON THE BASIS OF MECHANICAL PROPERTIES

- These steels are carbon and low alloy steels where the main criterion in the selection and inspection of steel is the tensile strength or yield stress.
- According to Indian standard these steels are designated by a symbol 'Fe' or 'Fe E' depending on whether the steel has been specified on the basis of minimum tensile strength or yield strength, followed by the figure indicating the minimum tensile strength or yield stress in N/mm^2
- For example 'Fe 290' means a steel having minimum tensile strength of 290 N/mm^2 and 'Fe E 220' means a steel having yield strength of 220 N/mm^2.

STEELS DESIGNATED ON THE BASIS OF CHEMICAL COMPOSITION

- According to Indian standard, steels are designated in the following order :
- (***a***) Figure indicating 100 times the average percentage of carbon content,
- (***b***) Letter 'C', and
- (***c***) Figure indicating 10 times the average percentage of manganese content. The figure after multiplying shall be rounded off to the nearest integer.
- For example 20C8 means a carbon steel containing 0.15 to 0.25 per cent (0.2 per cent on an average) carbon and 0.60 to 0.90 per cent (0.75 per cent rounded off to 0.8 per cent on an average) manganese.

INDIAN STANDARD DESIGNATION OF LOW AND MEDIUM ALLOY STEELS

- According to Indian standard, low and medium alloy steels shall be designated in the following order :

1. Figure indicating 100 times the average percentage carbon.

2. Chemical symbol for alloying elements each followed by the figure for its average percentage content multiplied by a factor as given below :

Element	*Multiplying factor*
Cr, Co, Ni, Mn, Si and W	4
Al, Be, V, Pb, Cu, Nb, Ti, Ta, Zr and Mo	10
P, S and N	100

- For example 40 Cr 4 Mo 2 means alloy steel having average 0.4% carbon, 1% chromium and 0.25% molybdenum.

INDIAN STANDARD DESIGNATION OF HIGH SPEED TOOL STEEL

- According to Indian standard, the high speed tool steels are designated in the following order :

1. Letter 'XT'.

2. Figure indicating 100 times the percentage of carbon content.

3. Chemical symbol for alloying elements each followed by the figure for its average percentage content rounded off to the nearest integer, and

4. Chemical symbol to indicate specially added element to attain the desired properties.

- For example, XT 75 W 18 Cr 4 V 1 means a tool steel with average carbon content 0.75 percent, tungsten 18 per cent, chromium 4 per cent and vanadium 1 per cent.

Preferred Numbers

- The system is based on the use geometric progression to develop a set of numbers
- There are five basic series denoted as R5, R10, R20, R40, and R80 series which increases in steps of 56%, 26%, 12%, 6% and 3% respectively
- Each series has its own series factor as shown below

R5 Series	$\sqrt[5]{10} = 1.58$
R10 Series	$\sqrt[10]{10} = 1.26$
R20 Series	$\sqrt[20]{10} = 1.12$
R40 Series	$\sqrt[40]{10} = 1.06$
R80 Series	$\sqrt[80]{10} = 1.03$

23

LIMITS & FITS

CONTENTS

LIMTS FITS AND TOLERANCES

INSPECTION

TYPES OF INSPECTION

TERMINOLOGY

NOMINAL SIZE: It is the size of a part specified in the drawing.

BASIC SIZE: It is the size of a part to which all limits of variation are determined.

ACTUAL SIZE: It is the actual measured dimension of a part. Nominal and basic size are often the same

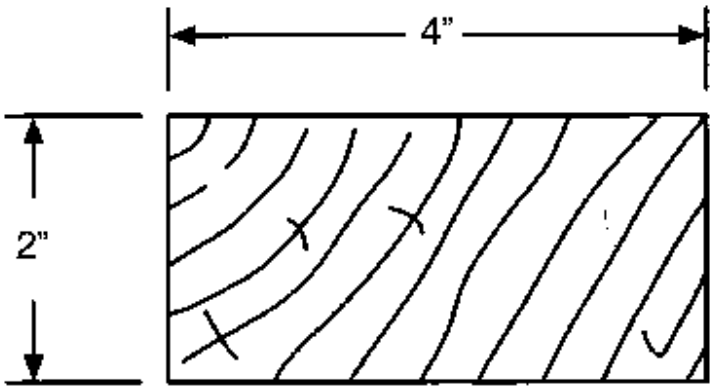

Nominal Size

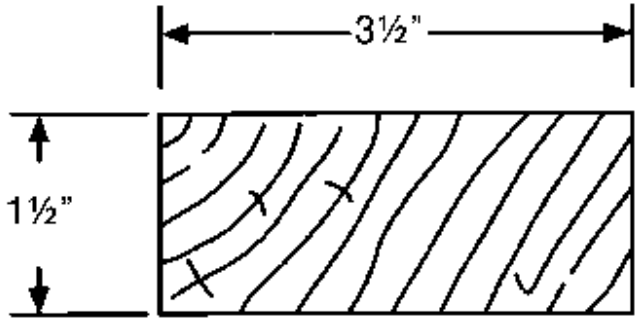

Actual Size

LIMIT OF SIZES

There are two extreme possible sizes of a component. The largest permissible size for a component is called upper limit and smallest size is called lower limit.

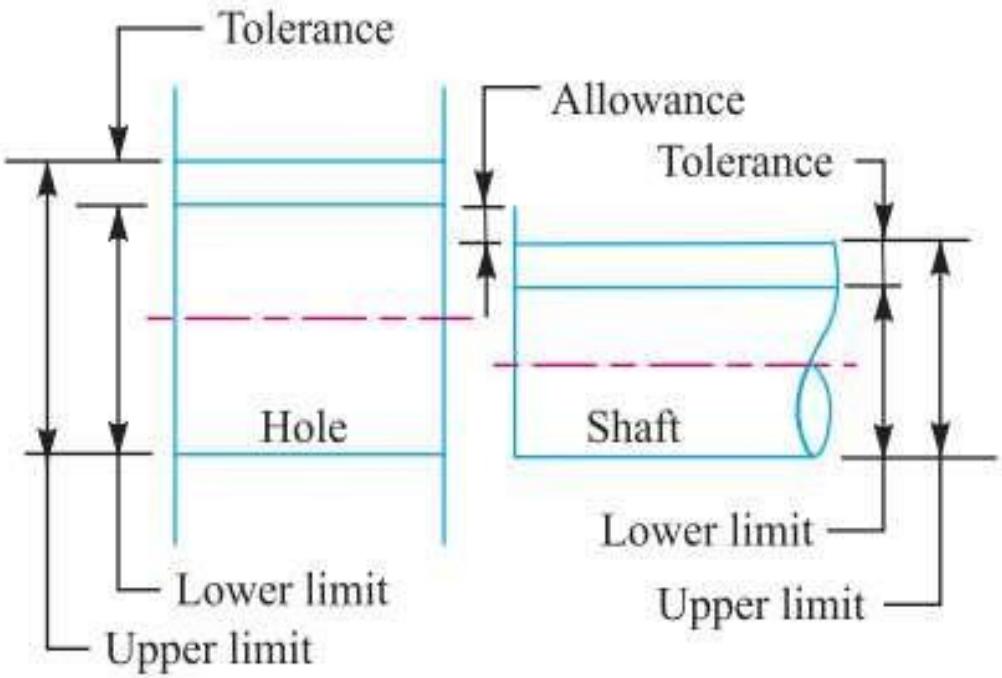

DEVIATION

LOWER DEVIATION: It is the algebraic difference between the minimum limit of size and the basic size.

UPPER DEVIATION: It is the algebraic difference between the maximum limit and the basic size.

ZERO LINE

It is the straight line corresponding to the basic size. The deviations are measured from this line.

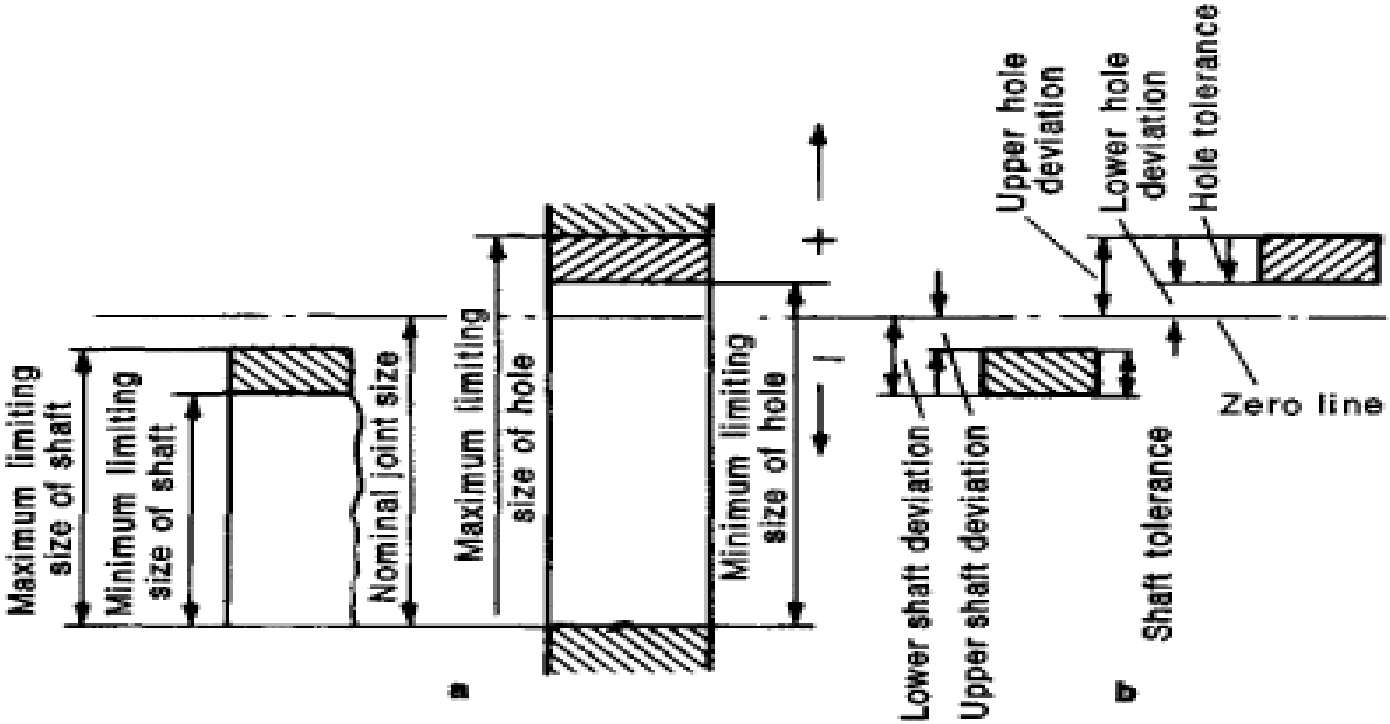

Tolerance

- A tolerance is the total permissible variation from the specified basic size of the part.

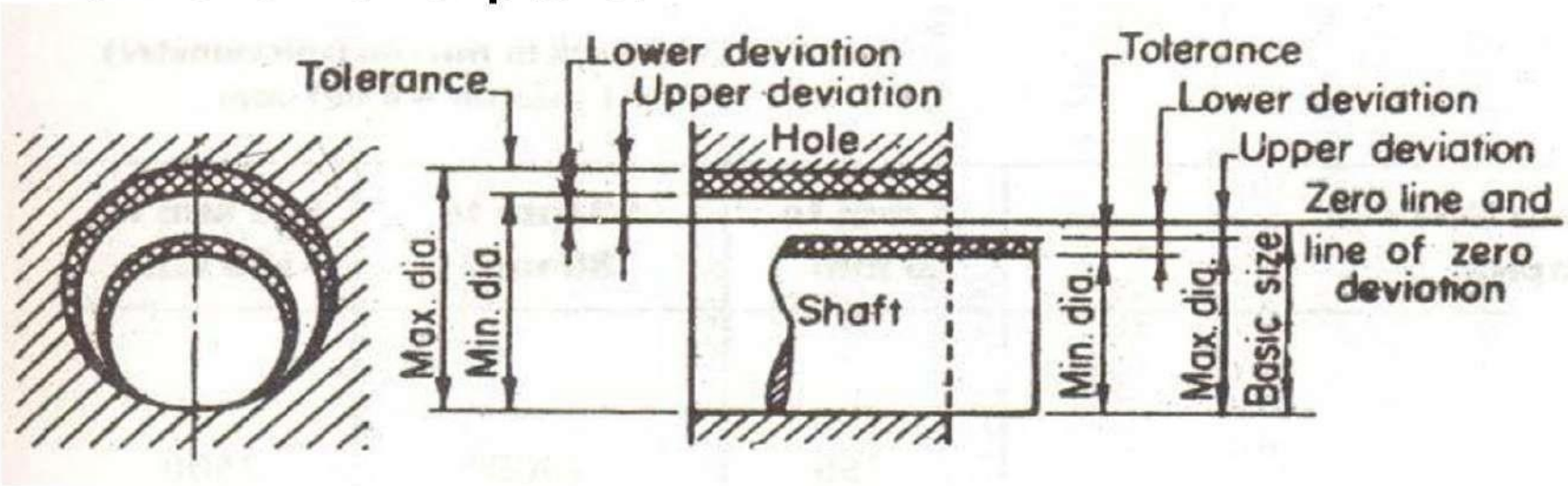

POSITIONAL TOLERANCES

Two types of positional tolerances are used:

Unilateral tolerances

Bilateral tolerances

When tolerance is on one side of basic size, it is called unilateral and if it is both in plus and minus then it is known as bilateral tolerance.

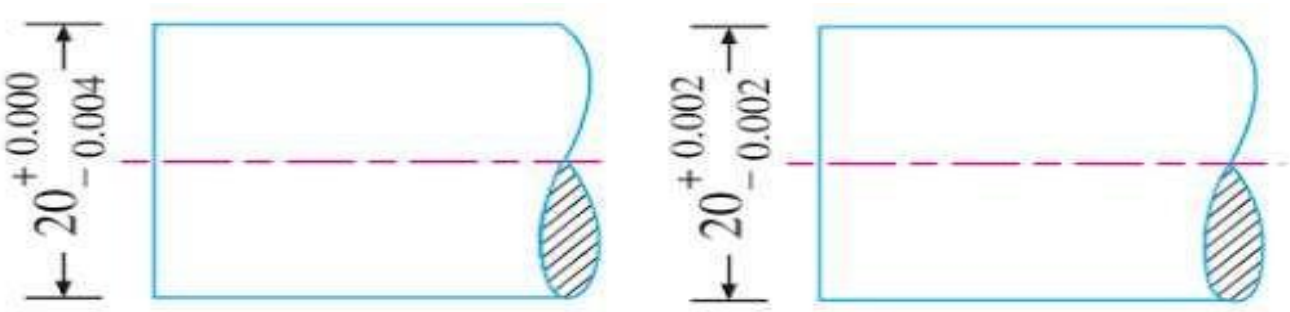

(*a*) Unilateral tolerance (*b*) Bilateral tolerance.

FITS

The degree of tightness or looseness between two mating parts is called a fit.

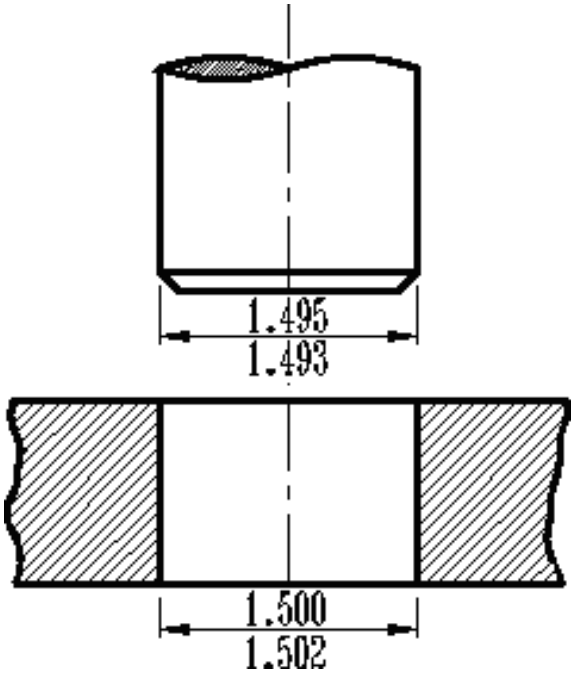

TYPES OF FITS

CLEARANCE FIT: There is a clearance or looseness in this type of fits. These fits maybe slide fit, easy sliding fit, running fit etc.

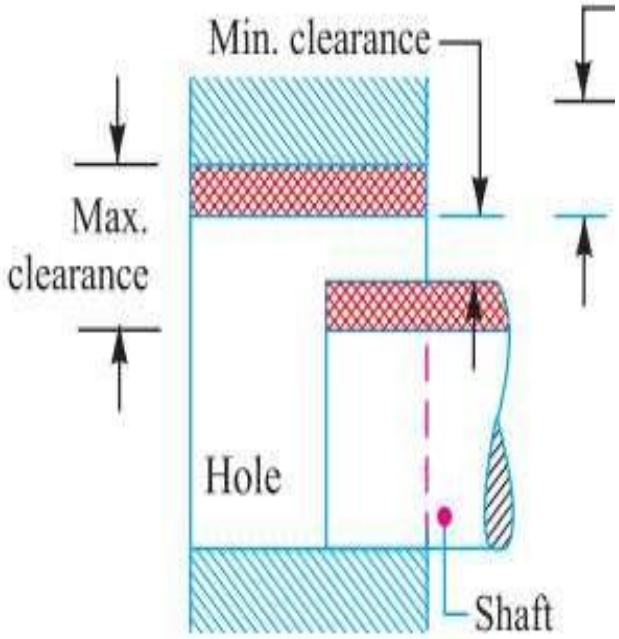

(*a*) Clearance fit.

TYPES OF FITS

INTERFERENCE FIT: There is an interference or tightness in these type of fits. E.g. shrink fit, heavy drive fit etc.

TRANSITION FIT: In this type of fit, the limits for the mating parts are so selected that either a clearance or interference may occur depending upon the actual size of the mating parts.

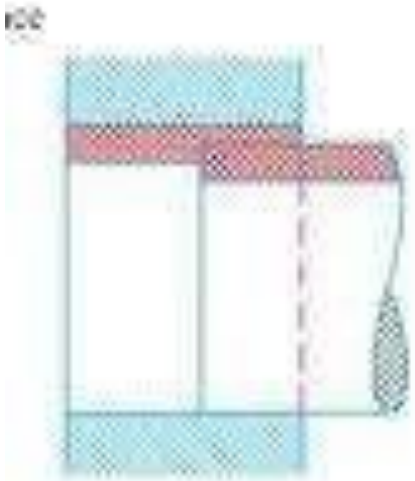

(c) Transition fit.

TYPES OF FITS

TRANSITION FIT: In this type of fit, the limits for the mating parts are so selected that either a clearance or interference may occur depending upon the actual size of the mating parts.

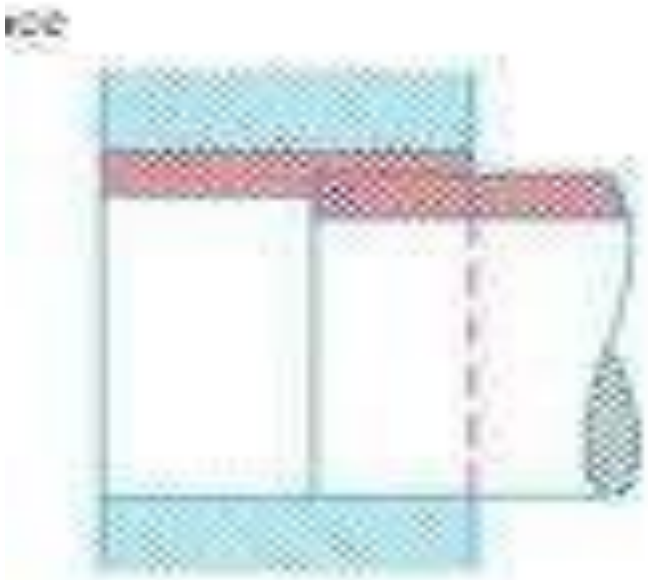

(c) Transition fit.

Factor of Safety (Safety Factor)

Eg: If a component needs to withstand a load of 100 N and a FoS of 3 is selected then it is designed with strength to support 300 N.

$$\text{FoS} = \frac{\text{Strength of the component (Max load)}}{\text{Load on the component (Actual load)}}$$

Factor of Safety (Safety Factor)

FoS (*Based on yeild strength*)	Application
1.25 - 1.5	Material properties known in detail Operating conditions known in detail Load and the resulting stresses and strains are known to a high degree of accuracy Low weight is important
2 - 3	For less tried materials or Brittle materials under average conditions of environment, load and stress
3 - 4	For untried materials under average conditions of environment, load and stress Better known materials under uncertain environment or uncertain stresses

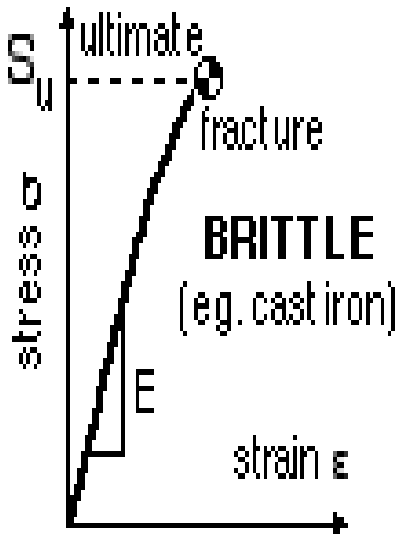
ultimate
S_u
fracture
stress σ
BRITTLE
(eg. cast iron)
E
strain ε

(D)

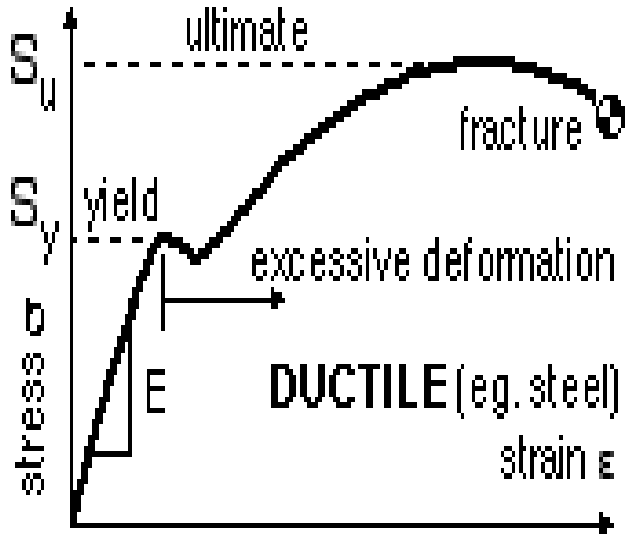
ultimate
S_u
fracture
S_y
yield
excessive deformation
stress σ
E
DUCTILE (eg. steel)
strain ε

(E)

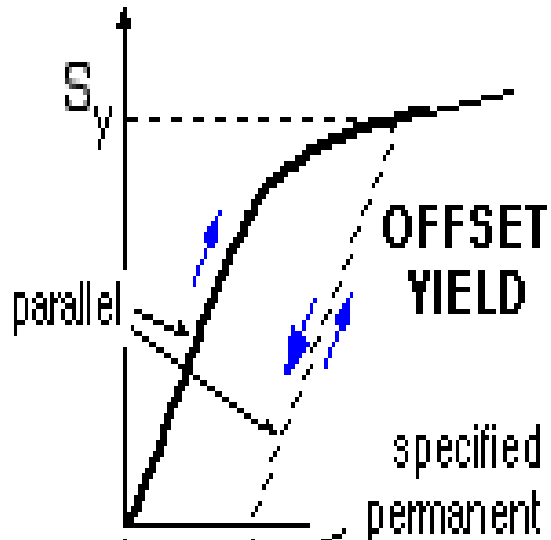
S_y
OFFSET
YIELD
parallel
specified
permanent
set eg. 0.2%

(F)

$$\text{FoS} = \frac{\text{Strength of the component } (S_u, S_y)}{\text{Stress in the component due to the actual load}}$$

- The cost factor (cost of material, manufacture)
- Whether failure could cause serious injury or death (a steam boiler or pressure vessel would use 8 – 10 FoS)
- Unknown stresses in the manufacturing process (casting would use 10 – 14 FoS)
- Environmental conditions (used in harsh environment or not)
- Knowledge of the environment
- Knowledge of the properties of the material used
- Knowledge of the loads (tension, compressive, shear, bending, cyclic loads, impact loads etc)
- Weight factor (aerospace 1.5 – 3 to reduce weight but strict quality control)
- Quality control, maintenance

Genesis of BIS

Government of India resolution on 3 September 1946 for establishment of Indian Standards Institution.

Indian Standards Institution (predecessor of Bureau of Indian Standards)set up on 6 January 1947.

Objectives : Promoting standardization ,quality control and simplification in industry & commerce.

Bureau of Indian Standards (BIS)Established on 1 April 1987 under BIS act, 1986 as statutory body

Bureau of Indian Standards

- Bureau of Indian Standards (BIS) took over work of ISI through enactment of ***BIS Act (1986)*** by the Indian Parliament.
- Formulates National standards and carried out conformity assessment by operating the Product and Management System Certification Scheme.
- Formulated over 18000 National Standards and also operating more than 22000 Certification licenses.
- Project India's view in various committees of International Organization for Standardization (ISO) and International Electro technical Commission (IEC)

Stress Concentration

- Whenever a machine component changes the shape of its cross-section, the simple stress distribution no longer holds good and the neighborhood of the discontinuity is different. This irregularity in the stress distribution caused by abrupt changes of form is called ***stress concentration.***
- A **stress concentration (stress raisers** or **stress risers)** is a location in an object where stress is concentrated. An object is strongest when force is evenly distributed over its area, so a reduction in area, e.g., caused by a crack, results in a localized increase in stress.
- A material can fail, via a propagating crack, when a concentrated stress exceeds the material's theoretical cohesive strength. The real fracture strength of a material is always lower than the theoretical value because most materials contain small cracks or contaminants (especially foreign particles) that concentrate stress.
- It occurs for all kinds of stresses in the presence of fillets, notches, holes, keyways, splines, surface roughness or scratches etc.

Internal Force lines are denser near the hole

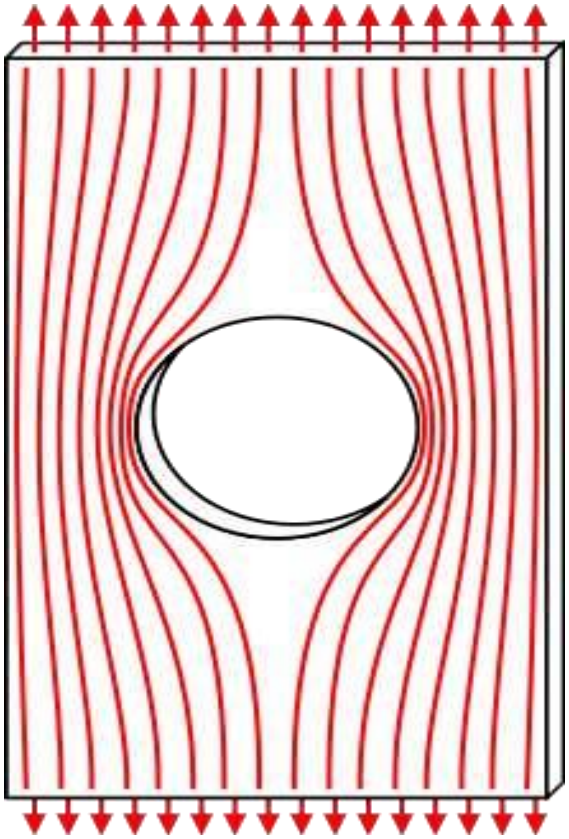

Theoretical or Form Stress Concentration Factor

- The theoretical or form stress concentration factor is defined as the ratio of the maximum stress in a member (at a notch or a fillet) to the nominal stress at the same section based upon net area.
- Mathematically, theoretical or form stress concentration factor,
- The value of *Kt* depends upon the material and geometry of the part.

$$K_t = \frac{\text{Maximum stress}}{\text{Nominal stress}}$$

Fatigue Stress Concentration Factor

- When a machine member is subjected to cyclic or fatigue loading, the value of fatigue stress concentration factor shall be applied instead of theoretical stress concentration factor.
- Mathematically, fatigue stress concentration factor,

$$K_f = \frac{\text{Endurance limit without stress concentration}}{\text{Endurance limit with stress concentration}}$$

Notch Sensitivity

- **Notch Sensitivity:** It may be defined as the degree to which the theoretical effect of stress concentration is actually reached.
- **Notch Sensitivity Factor "q":** Notch sensitivity factor is defined as the ratio of increase in the actual stress to the increase in the nominal stress near the discontinuity in the specimen.

  Where, Kf and Kt are the fatigue stress concentration factor and theoretical stress concentration factor.
- The stress gradient depends mainly on the radius of the notch, hole or fillet and on the grain size of the material.

$$q = \frac{K_f - 1}{K_t - 1}$$

Methods to reduce stress concentration

- The presence of stress concentration can not be totally eliminated but it may be reduced to some extent.
- A device or concept that is useful in assisting a design engineer to visualize the presence of stress concentration and how it may be mitigated is that of stress flow lines.
- The mitigation of stress concentration means that the stress flow lines shall maintain their spacing as far as possible.

- In Fig. (a), we see that stress lines tend to bunch up and cut very close to the sharp re-entrant corner. In order to improve the situation, fillets may be provided, as shown in Fig. (*b*) and (*c*) to give more equally spaced flow lines.
- It may be noted that it is not practicable to use large radius fillets as in case of ball and roller bearing mountings. In such cases, notches may be cut as shown in Fig. (*d*).

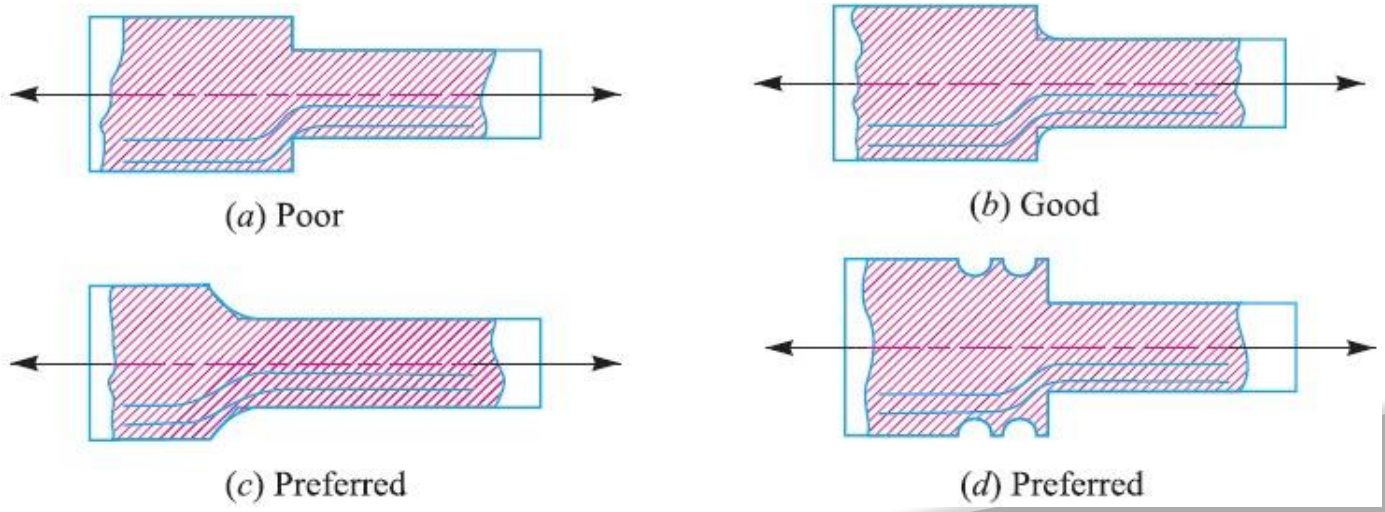

Following figures show the several ways of reducing the stress concentration in shafts and other cylindrical members with shoulders

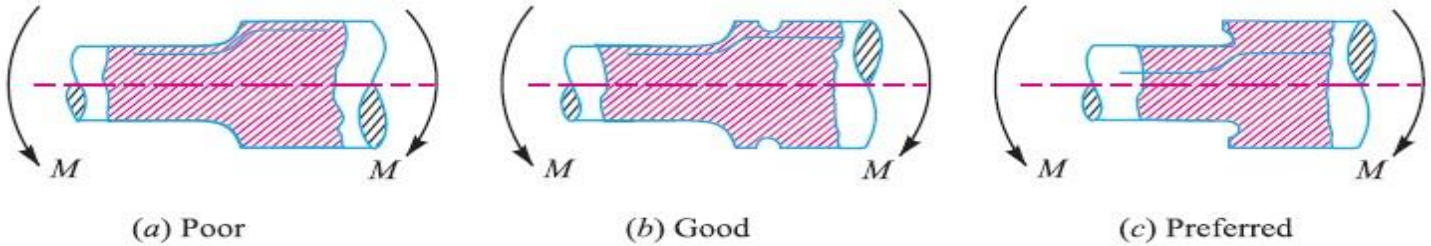

Fig. 6.9. Methods of reducing stress concentration in cylindrical members with shoulders.

Fig. 6.10. Methods of reducing stress concentration in cylindrical members with holes.

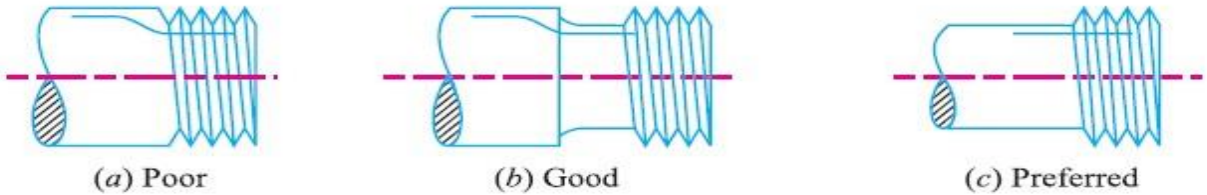

Fig. 6.11. Methods of reducing stress concentration in cylindrical members with holes.

Factors to be Considered while Designing Machine Parts to Avoid Fatigue Failure

- The following factors should be considered while designing machine parts to avoid fatigue failure:

1.The variation in the size of the component should be as gradual as possible.

2. The holes, notches and other stress raisers should be avoided.

3.The proper stress de-concentrators such as fillets and notches should be provided wherever necessary.

4. The parts should be protected from corrosive atmosphere.

5. A smooth finish of outer surface of the component increases the fatigue life.

6. The material with high fatigue strength should be selected.

7. The residual compressive stresses over the parts surface increases its fatigue strength.

Endurance limit and Fatigue failure

- It has been found experimentally that when a material is subjected to repeated stresses, it fails at stresses below the yield point stresses. Such type of failure of a material is known as **fatigue.**
- The failure is caused by means of a progressive crack formation which are usually fine and of microscopic size. The failure may occur even without any prior indication.
- The fatigue of material is effected by the size of the component, relative magnitude of static and fluctuating loads and the number of load reversals.

Factors affecting endurance limit

1) SIZE EFFECT:

- The strength of large members is lower than that of small specimens.
  This may be due to two reasons.
- The larger member will have a larger distribution of weak points than the smaller one and on an average, fails at a lower stress.
- Larger members have larger surface Ares. This is important because the imperfections that cause fatigue failure are usually at the surface.

2) SURFACE ROUGHNESS:

- Almost all fatigue cracks nucleate at the surface of the members.
- The conditions of the surface roughness and surface oxidation or corrosion are very important.
- Experiments have shown that different surface finishes of the same material will show different fatigue strength.
- Methods which Improve the surface finish and those which introduce compressive stresses on the surface will improve the fatigue strength.
- Smoothly polished specimens have higher fatigue strength.
- Surface treatments. Fatigue cracks initiate at free surface, treatments can be significant
- Plating, thermal or mechanical means to induce residual stress

S-N Diagram

Fatigue strength of material is determined by R.R. Moore rotating beam machine. The surface is polished in the axial direction.

A constant bending load is applied.

The surface is polished in the axial direction. A constant bending load is applied.

Typical testing apparatus, pure bending

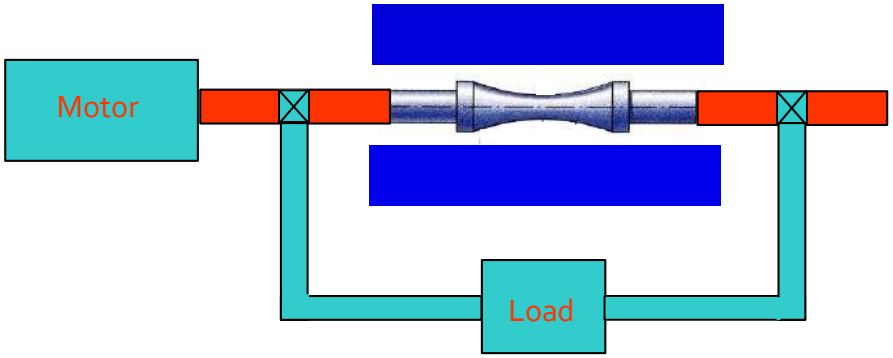

- A record is kept of the number of cycles required to produce failure at a given stress, and the results are plotted in stress-cycle curve as shown in figure.
- A little consideration will show that if the stress is kept below a certain value the material will not fail whatever may be the number of cycles.
- This stress, as represented by dotted line, is known as ***endurance*** or ***fatigue limit*** (σe).
- It is defined as maximum value of the completely reversed bending stress which a polished standard specimen can withstand without failure, for infinite number of cycles (usually 107 cycles).

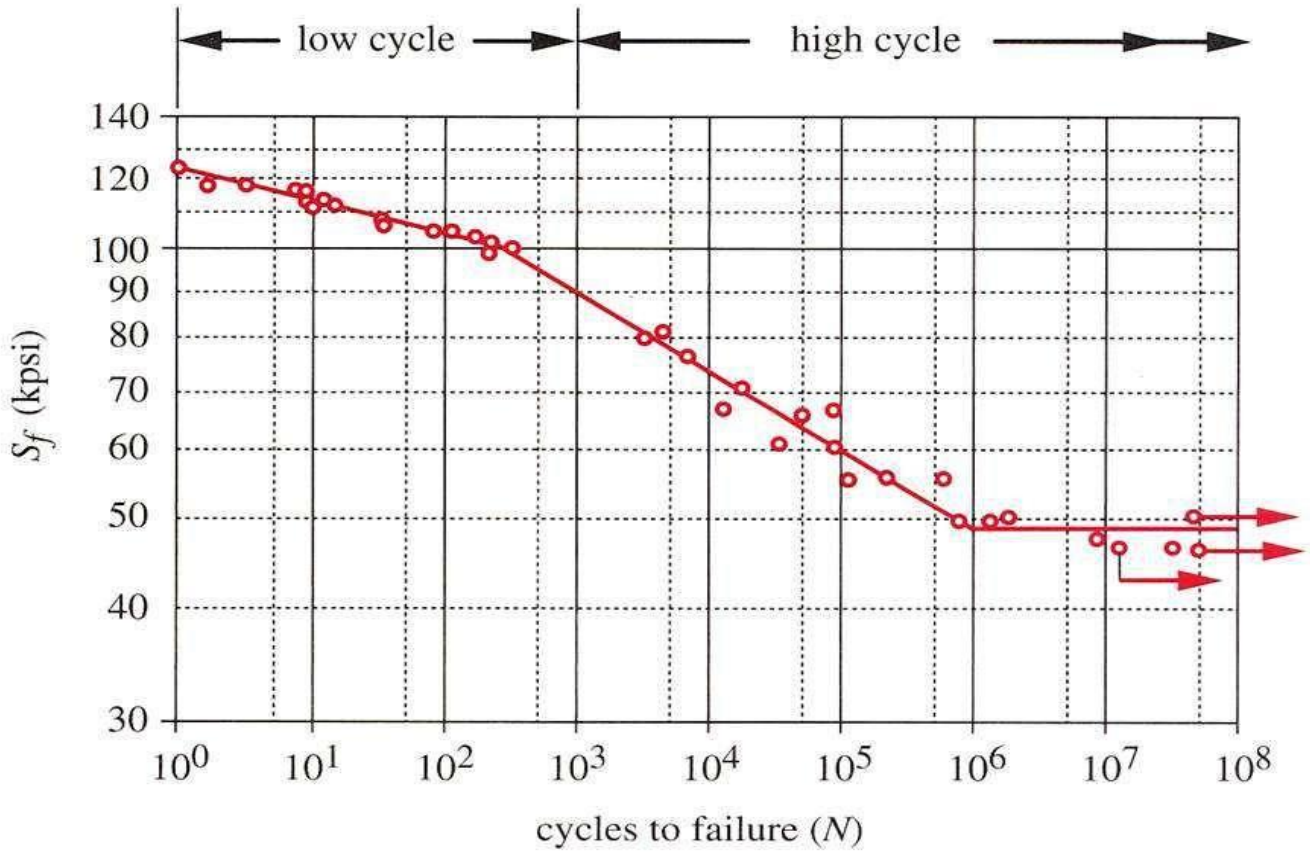
low cycle
high cycle
140
120
100
90
80
70
60
50
40
30
S_f (kpsi)
10^0
10^1
10^2
10^3
10^4
10^5
10^6
10^7
10^8
cycles to failure (N)

Correction Factors for Specimen's Endurance Limit

$\mathbf{S_e = k_a k_b k_c k_d k_e k_f S_e'}$

Where S_e = endurance limit of component

S_e' = endurance limit experimental

k_a = surface finish factor (machined parts have different finish)

k_b = size factor (larger parts greater probability of finding defects)

k_c = reliability / statistical scatter factor (accounts for random variation)

k_d = loading factor (differences in loading types)

k_e = operating T factor (accounts for diff. in working T & room T)

k_f = stress concentration factor

Fluctuating stresses

- The failure points from fatigue tests made with different steels and combinations of mean and variable stresses are plotted in figure as functions of stress amplitude(σa) and mean stress (σm).
- The most significant observation is that, in general, the failure point is little related to the mean stress when it is compressive but is very much a function of the mean stress when it is tensile.
- In practice, this means that fatigue failures are rare when the mean stress is compressive (or negative). Therefore, the greater emphasis must be given to the combination of a variable stress and a steady (or mean) tensile stress.

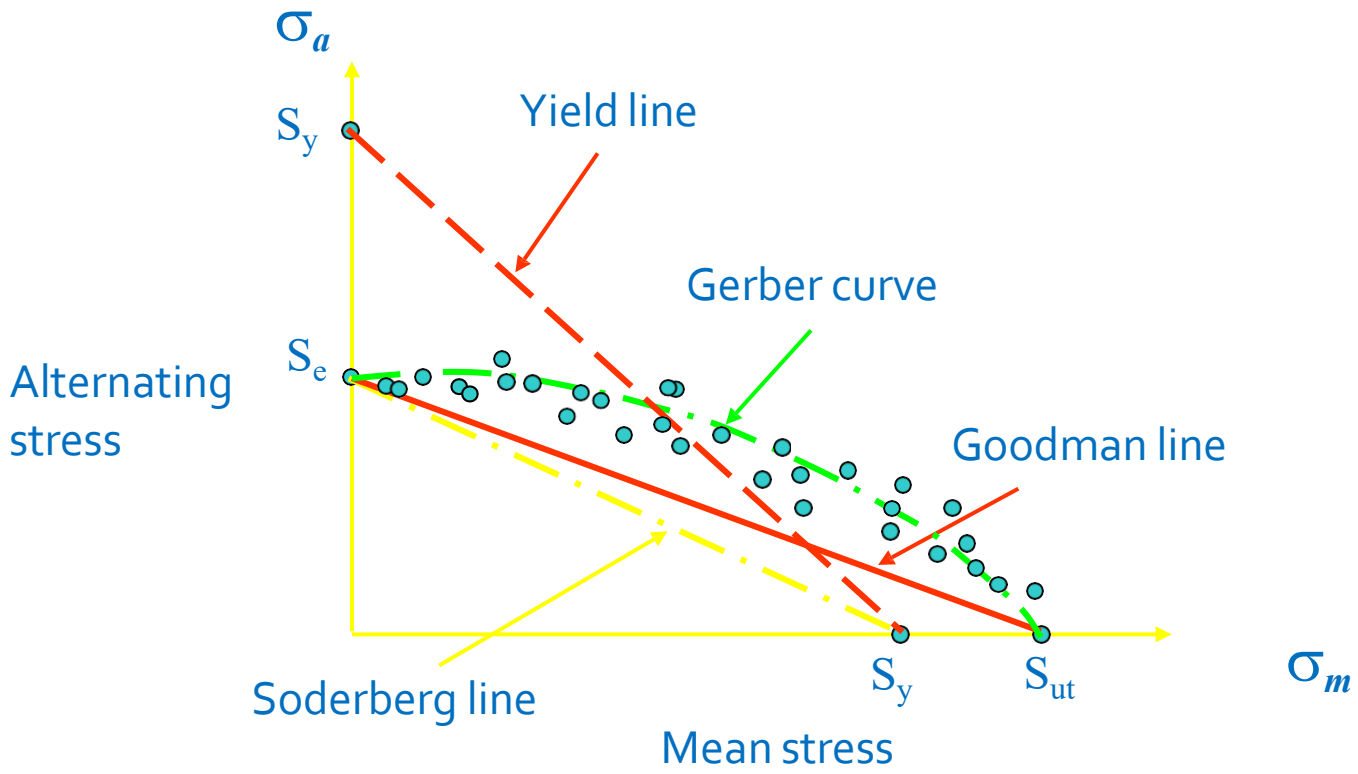
σa
Sy
Yield line
Gerber curve
Se
Alternating stress
Goodman line
Soderberg line
Sy
Sut
σm
Mean stress

Goodman Method for Combination of Stresses:

A straight line connecting the endurance limit (σ*e*) and the ultimate strength (σ*u*), as shown by line *AB* in figure given below follows the suggestion of Goodman.

A Goodman line is used when the design is based on ultimate strength and may be used for ductile or brittle materials.

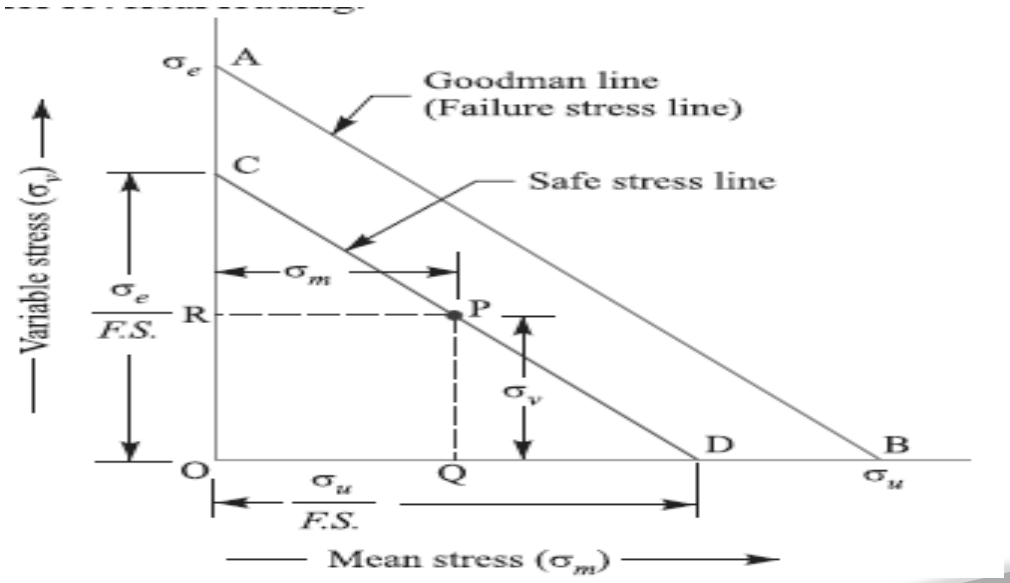

Now from similar triangles COD and PQD,

$$\frac{PQ}{CO} = \frac{QD}{OD} = \frac{OD - OQ}{OD} = 1 - \frac{OQ}{OD} \qquad \ldots(\because\ QD = OD - OQ)$$

$$\therefore \qquad \frac{\sigma_v}{\sigma_e / F.S.} = 1 - \frac{\sigma_m}{\sigma_u / F.S.}$$

$$\sigma_v = \frac{\sigma_e}{F.S.}\left[1 - \frac{\sigma_m}{\sigma_u / F.S.}\right] = \sigma_e\left[\frac{1}{F.S.} - \frac{\sigma_m}{\sigma_u}\right]$$

or

$$\frac{1}{F.S.} = \frac{\sigma_m}{\sigma_u} + \frac{\sigma_v}{\sigma_e} \qquad \ldots(i)$$

Soderberg Method for Combination of Stresses

- A straight line connecting the endurance limit (σe) and the yield strength (σy), as shown by the line *AB* in following figure, follows the suggestion of Soderberg line.
- This line is used when the design is based on yield strength. the line *AB* connecting σe and σy, as shown in following figure, is called ***Soderberg's failure stress line***.

63

UNIT-II

DESIGN OF BOLTED AND WELDED JOINTS

Failure of bolted or riveted joints

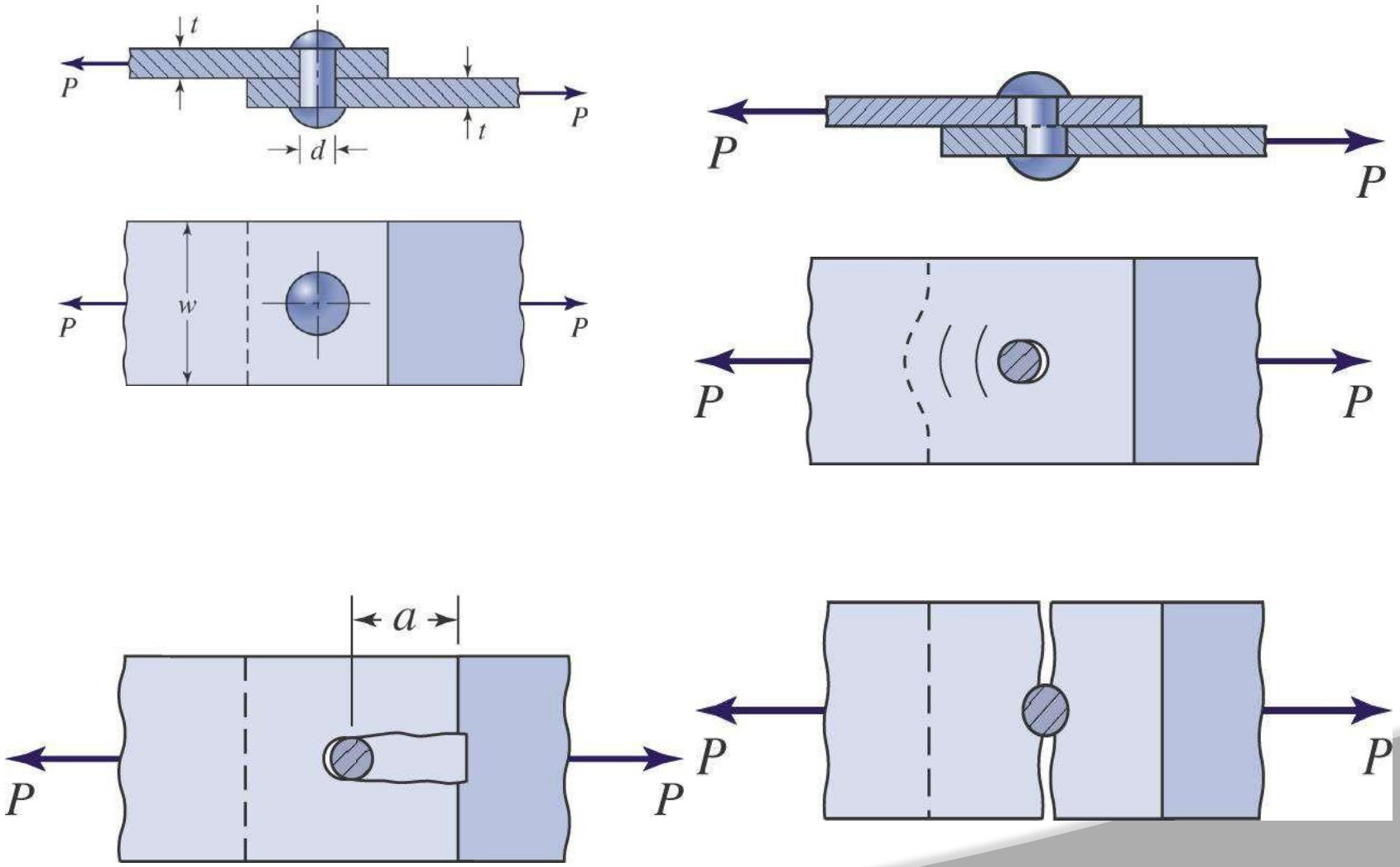

Lap Joint (single Joint) Butt Joint

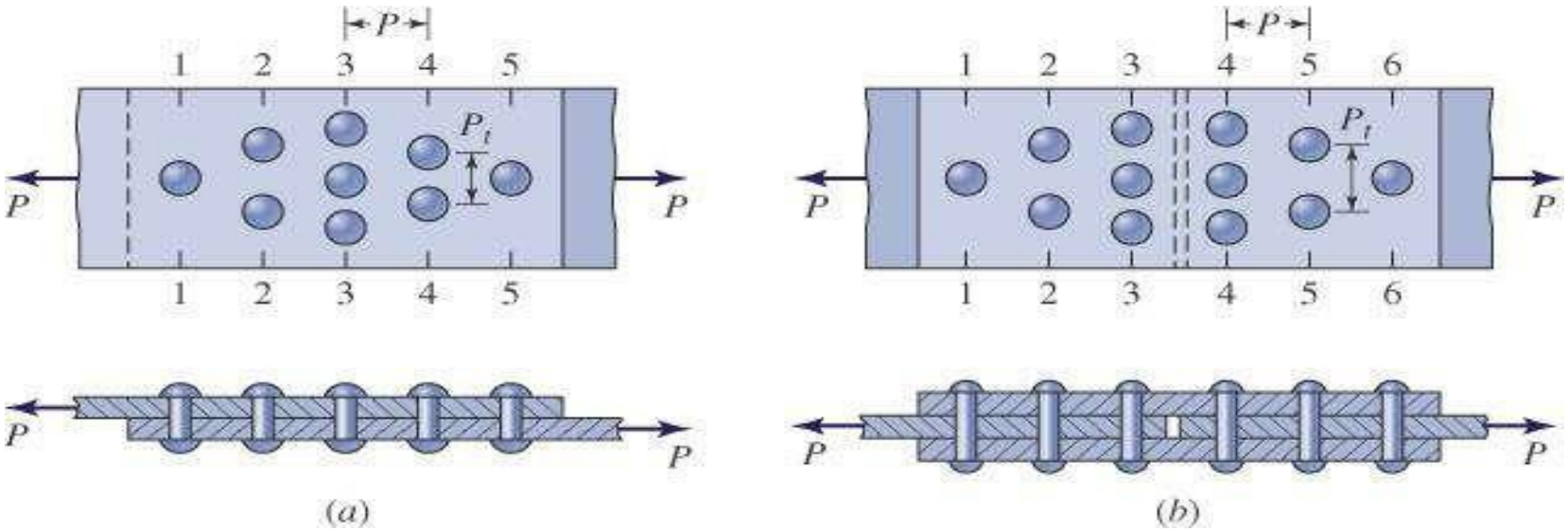

EXAMPLE -1

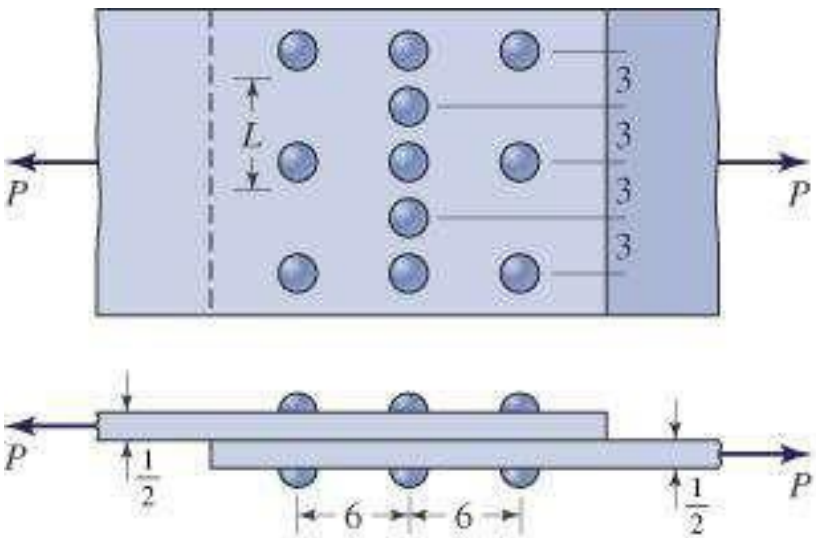

(a)

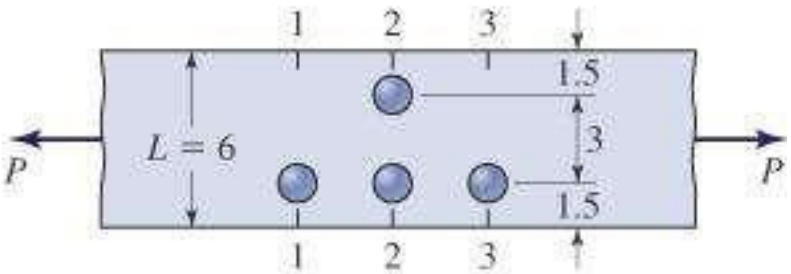

(b)

EXAMPLE - 2

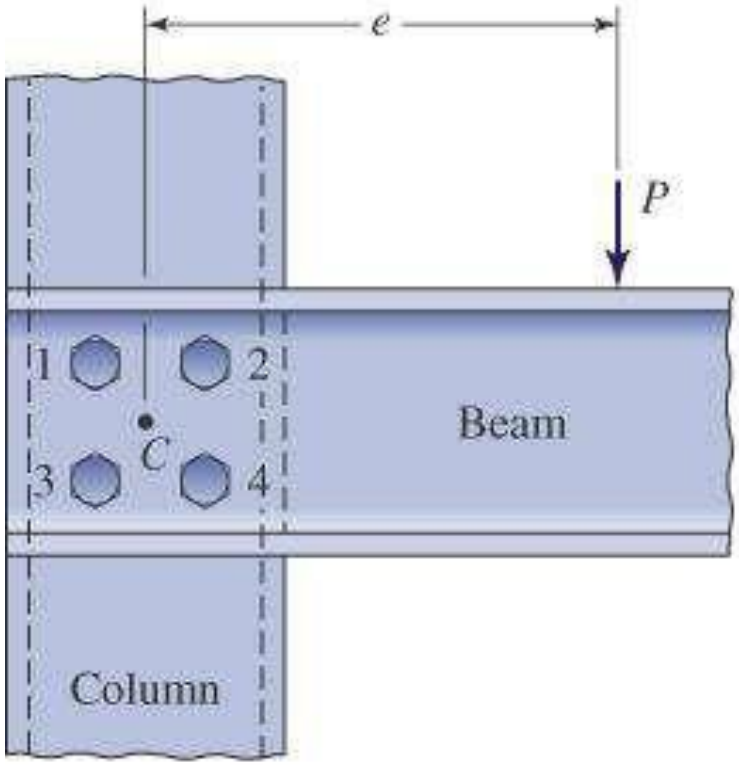
e
P
1
2
3
4
C
Beam
Column

(a)

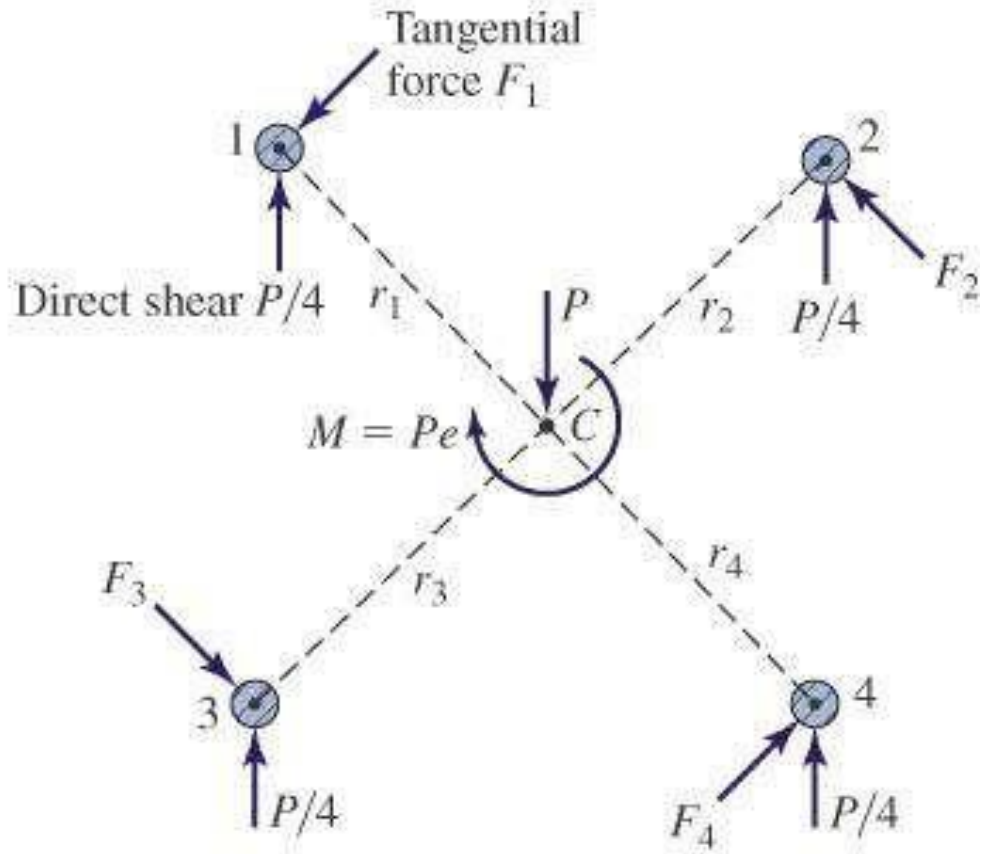
Tangential force F_1
1
2
Direct shear $P/4$
r_1
P
r_2
$P/4$
F_2
$M = Pe$
C
F_3
r_3
r_4
3
4
$P/4$
F_4
$P/4$

(b)

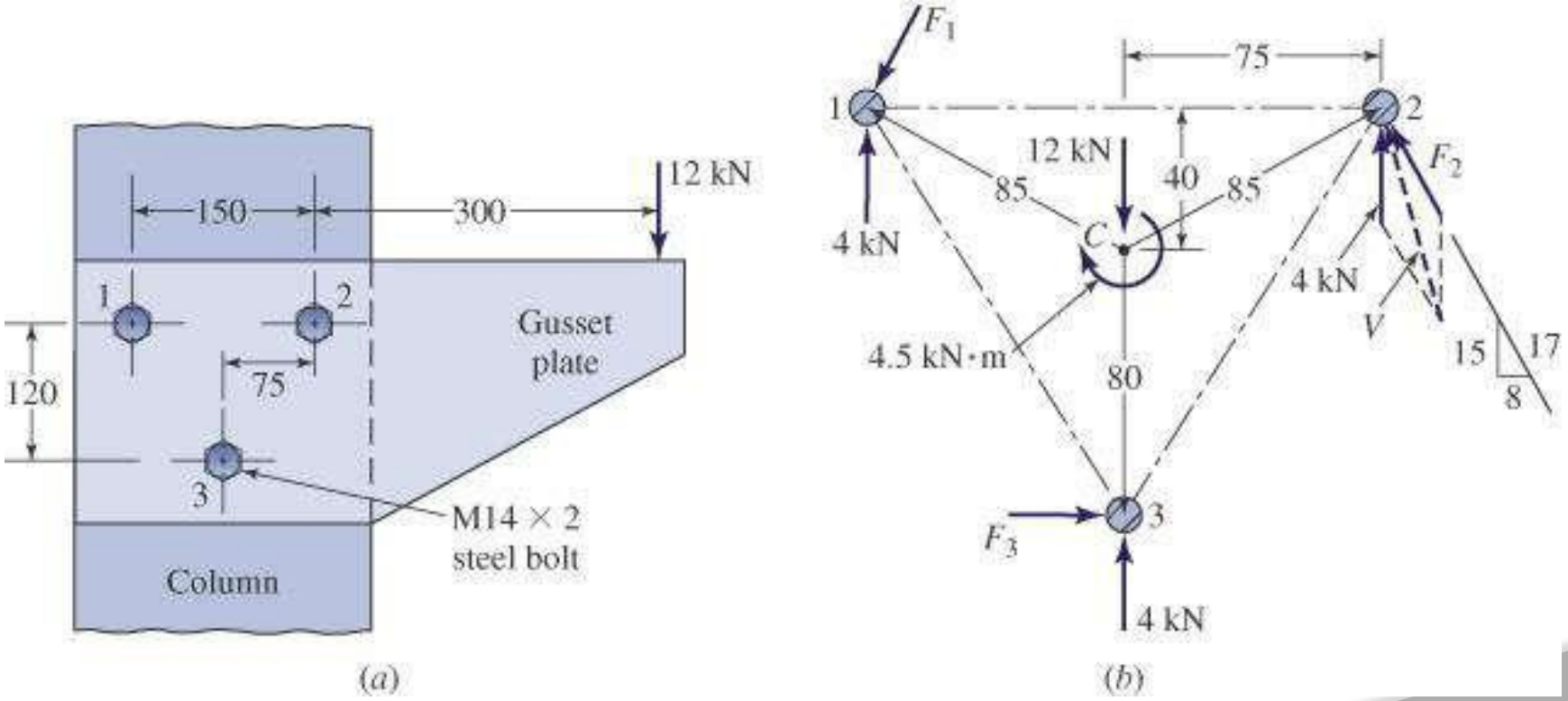
150
300
12 kN
1
2
Gusset plate
120
75
3
M14 × 2 steel bolt
Column
(a)
F_1
75
1
2
12 kN
40
85
85
F_2
4 kN
C
4 kN
V
4.5 kN·m
80
15
17
8
F_3
3
4 kN
(b)

EXAMPLE -3

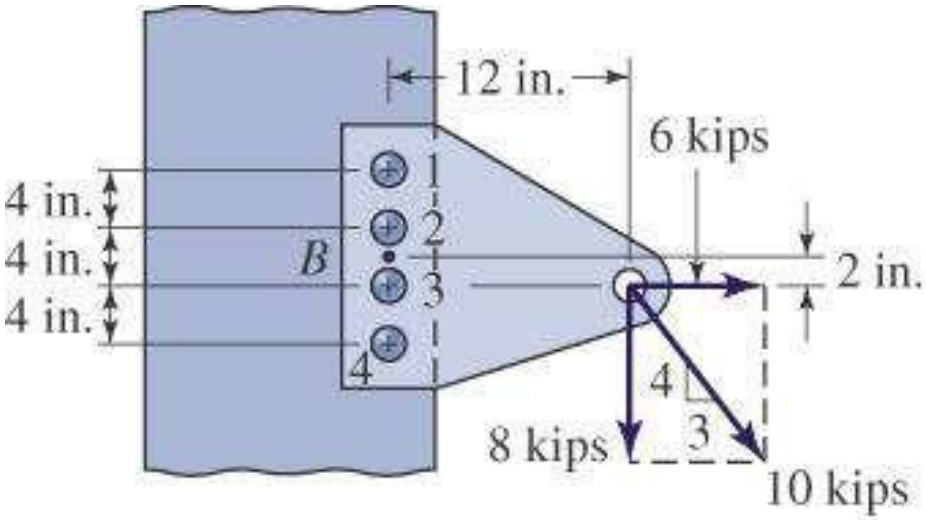
12 in.
6 kips
4 in.
4 in.
4 in.
B
1
2
3
4
2 in.
4
3
8 kips
10 kips

(a)

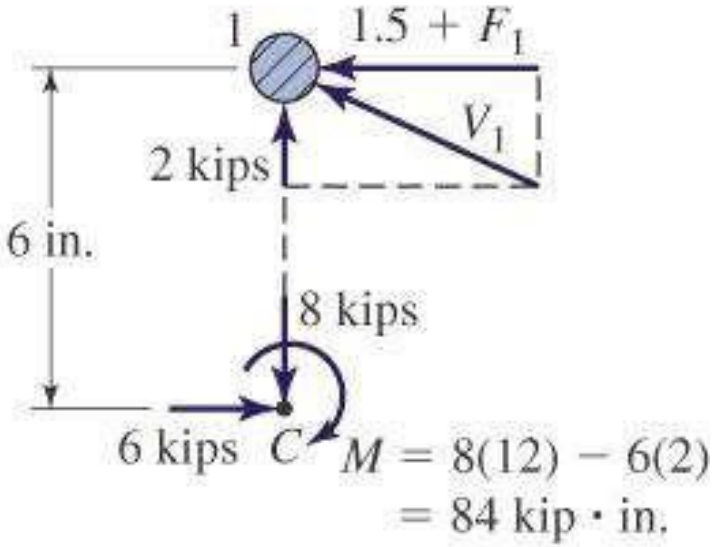
1
1.5 + F_1
V_1
2 kips
6 in.
8 kips
6 kips
C
$M = 8(12) - 6(2)$
$= 84$ kip · in.

(b)

WELDED JOINTS

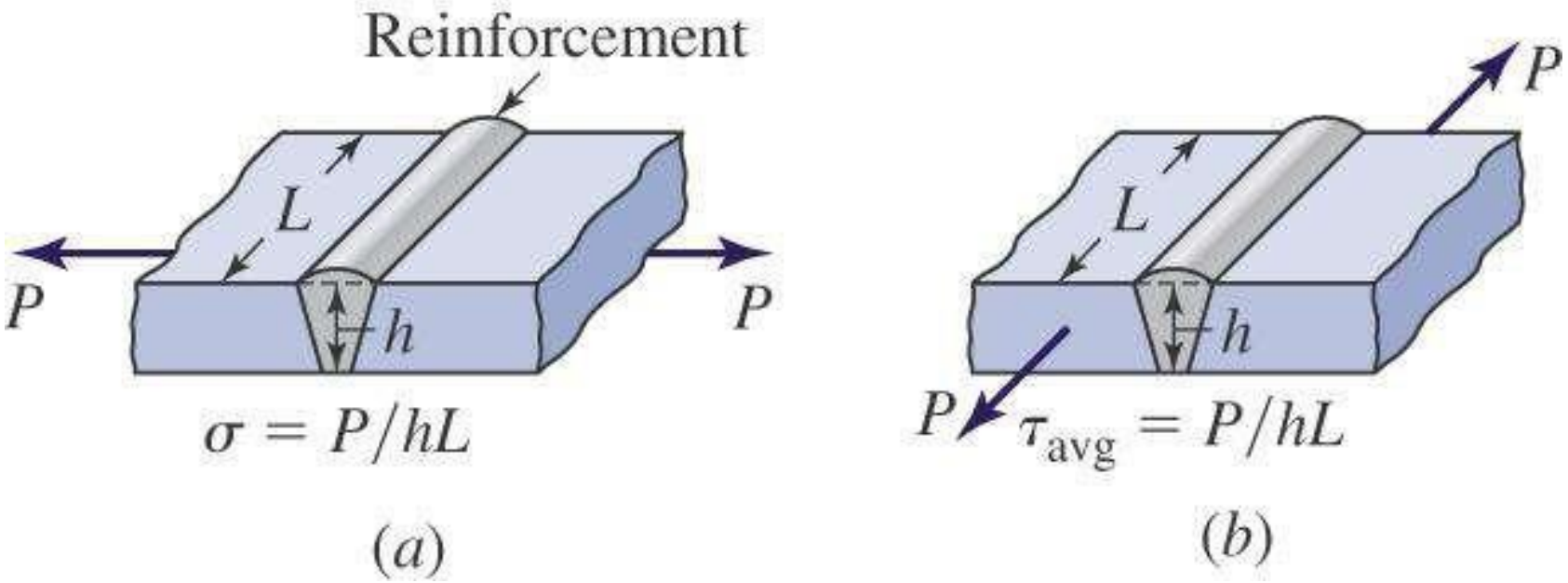

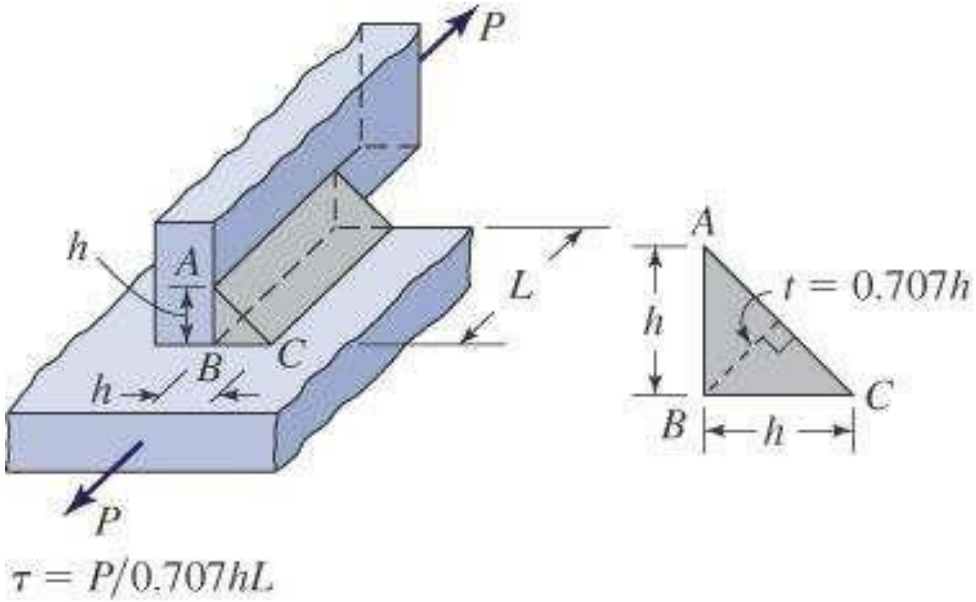

(a)

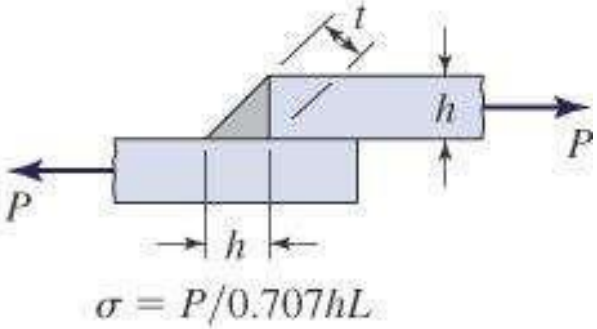

(b)

Weld under Bending

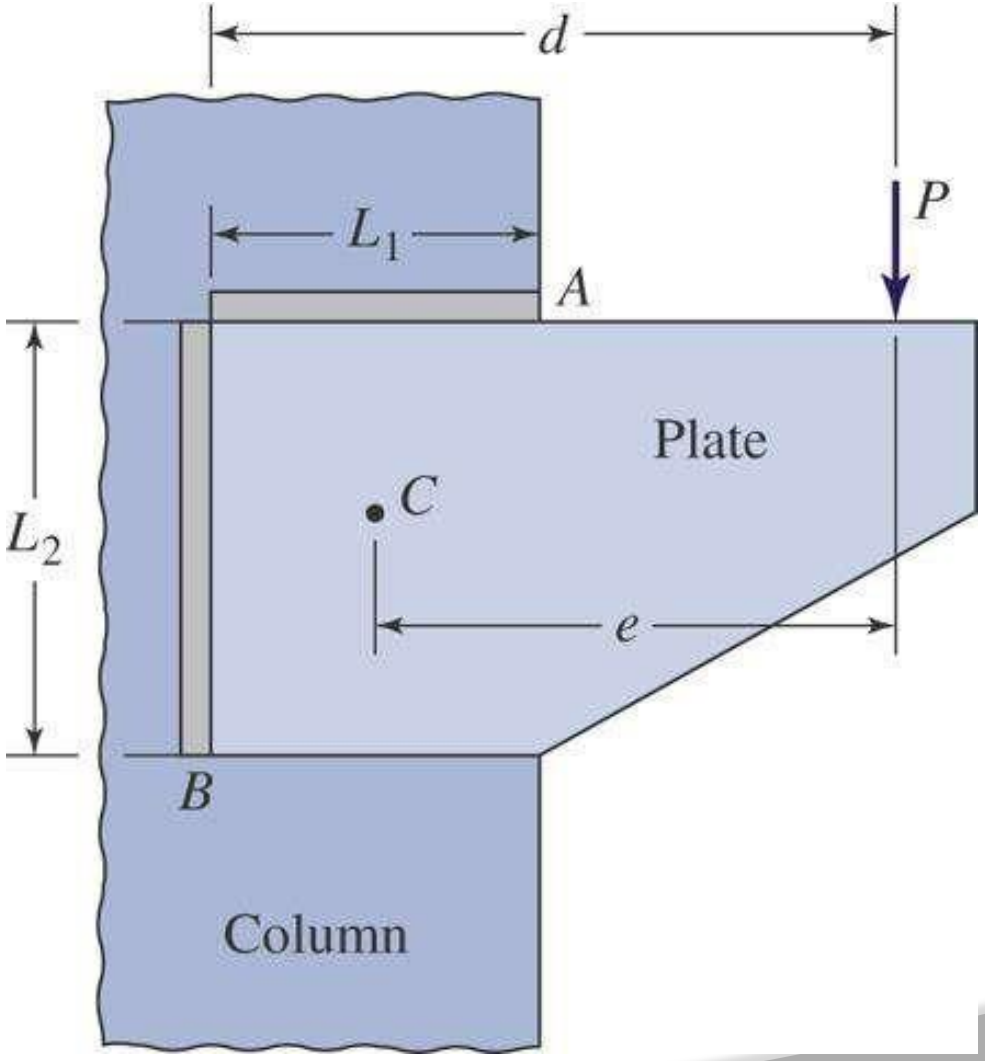

Weld under Bending

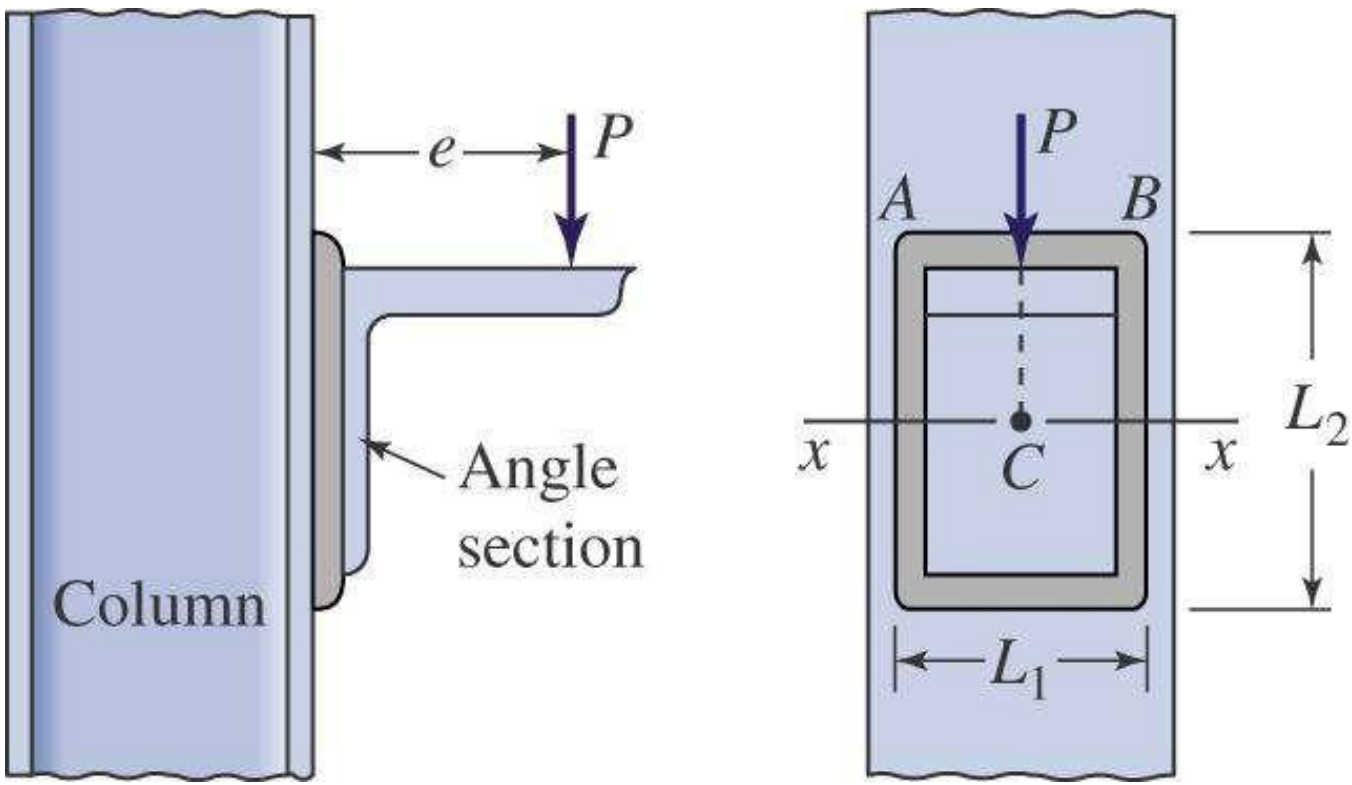

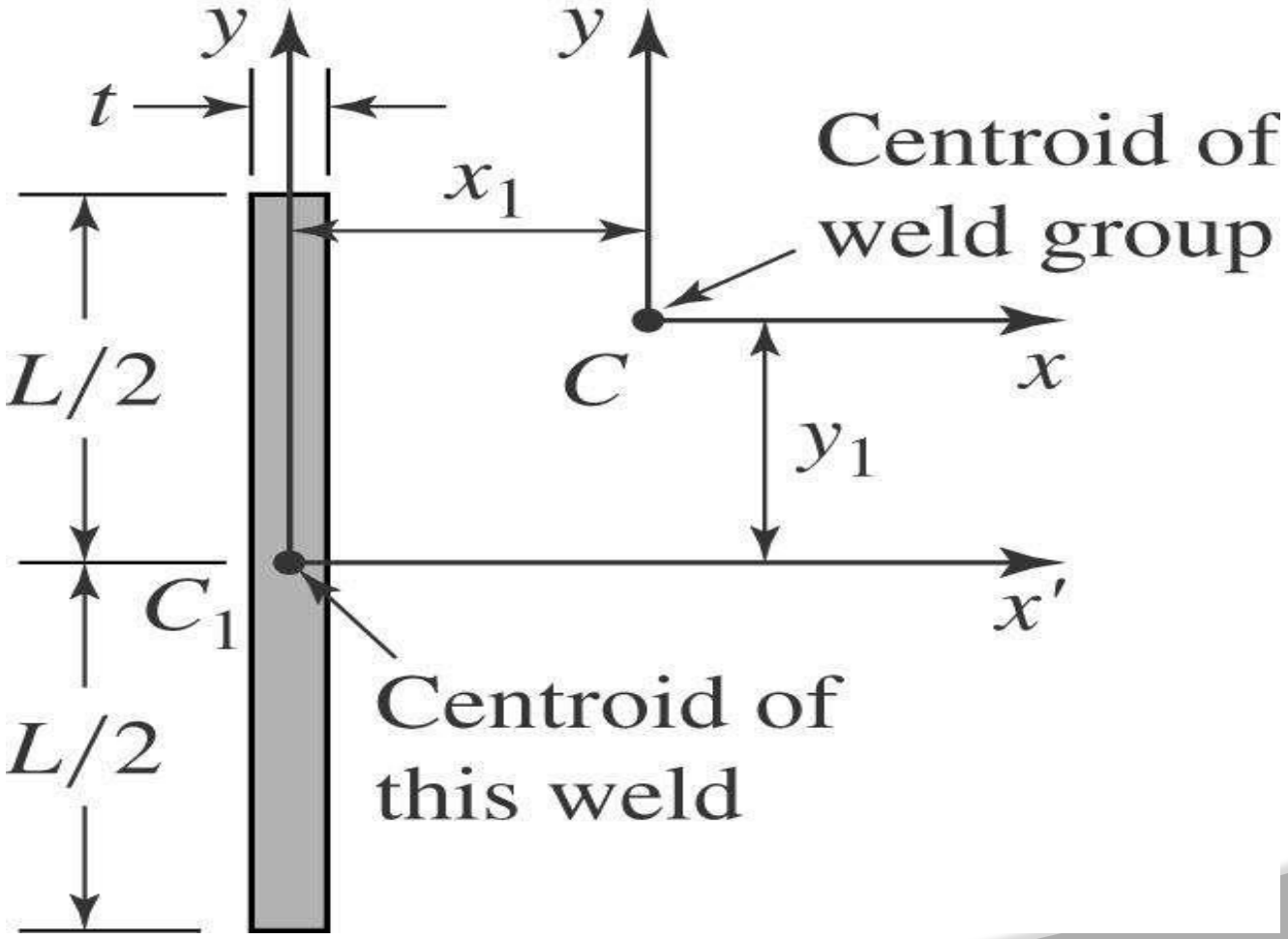
y
y
t
Centroid of
weld group
x_1
L/2
C
x
y_1
C_1
x′
Centroid of
this weld
L/2

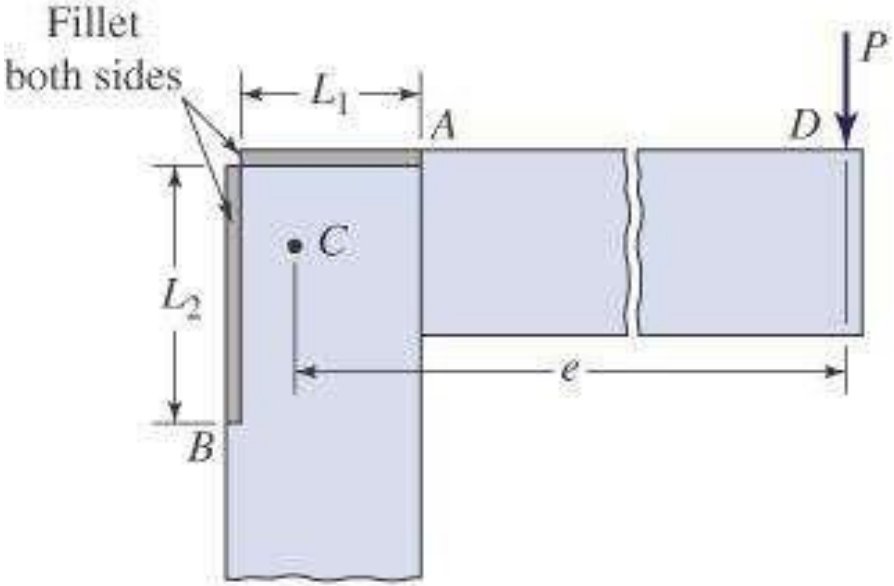
Fillet
both sides
L_1
A
P
D
C
L_2
e
B

(a)

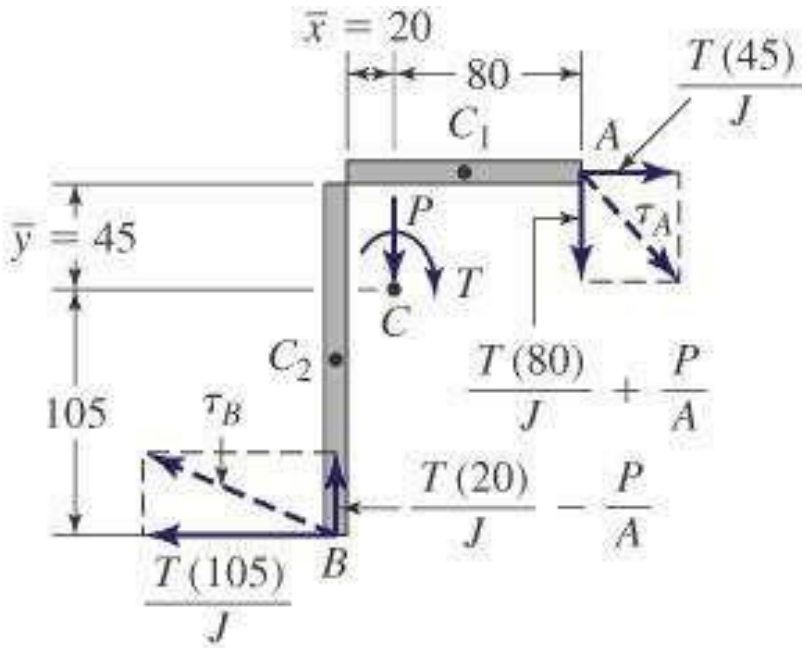
$\bar{x} = 20$
80
$\frac{T(45)}{J}$
C_1
A
$\bar{y} = 45$
P
τ_A
T
C
C_2
$\frac{T(80)}{J} + \frac{P}{A}$
105
τ_B
$\frac{T(20)}{J} - \frac{P}{A}$
B
$\frac{T(105)}{J}$

(b)

Threaded Fasteners

Fastener Types

Bolt

Bolts are defined as headed fasteners having external threads that meet an exacting, uniform bolt thread specification such that they can accept a non-tapered nut.

Screws are defined as headed, externally-threaded fasteners that do not meet the above definition of bolts. Screws always cut their own internal threads when initially installed, as there is generally no tool meeting the arbitrary specification of their threads to tap out the internal threads beforehand. Also, they are generally tapered to a sharp point.

89

Head Style

- **Flat**
  A countersunk head with a flat top.
  Abbreviated FH

- **Oval**
  A countersunk head with a rounded top.
  Abbreviated OH or OV

- **Pan**
  A slightly rounded head with short vertical sides.
  Abbreviated PN

- **Truss**
  An extra wide head with a rounded top.

- **Round**
  A domed head.
  Abbreviated RH

90

- **Hex**
  A hexagonal Head.
  Abbreviated HH or HX

- **Hex Washer**
  A hex head with built in washer.

- **Slotted Hex Washer**
  A hex head with built in washer and a slot.

- **Socket Head Cap**
  A small cylindrical head using a socket drive.

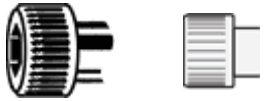

- **Button**
  A low profile rounded head using a socket drive.

Thread Types

- Unified Thread
  - UNC – Unified National Coarse
  - UNF – Unified National Fine
- American National Thread
- Sharp-V Thread
- Metric Thread
- Whitworth Thread
- Square Thread
- Acme Thread
- Buttress Thread
- Rolled Thread
- Pipe Thread
  - NPT – National Pipe Taper
  - NPS – National Pipe Straight

Thread Detail

Crest Width = 1/8 Pitch

Root Width = ¼ Pitch

r = Radius at the Root = 0.1443 x P

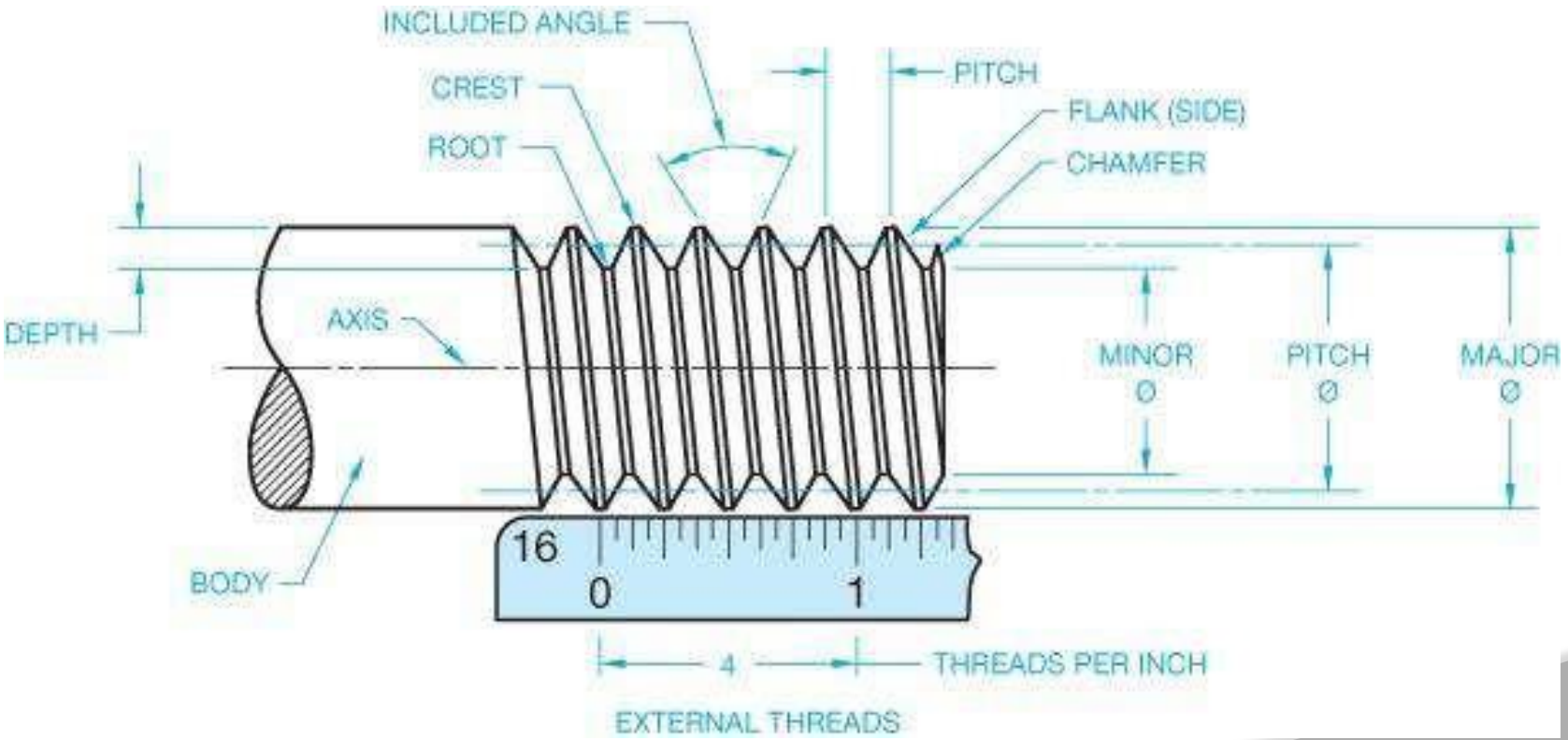

Internal and External Threads

- Thread fit comparison

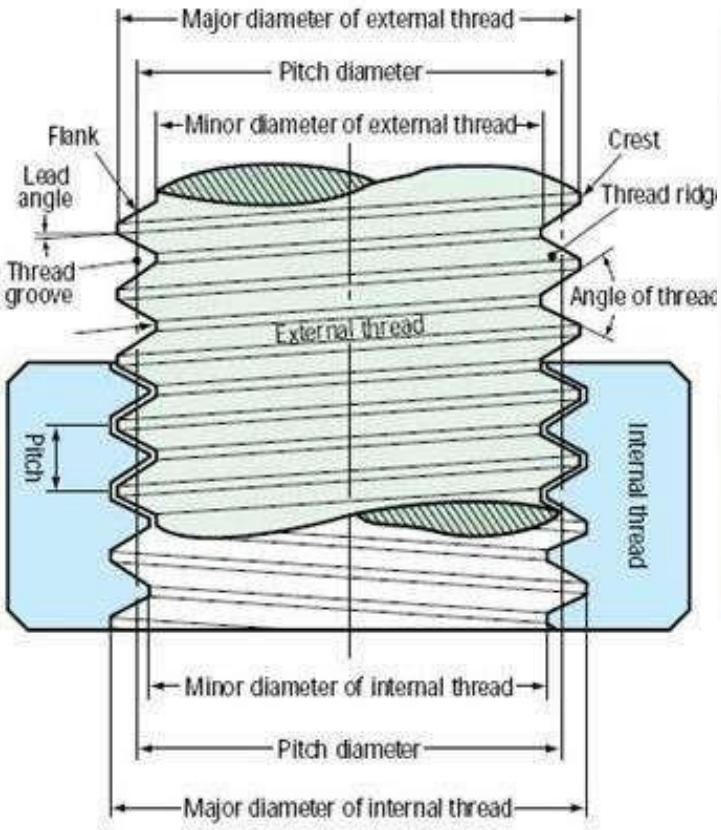

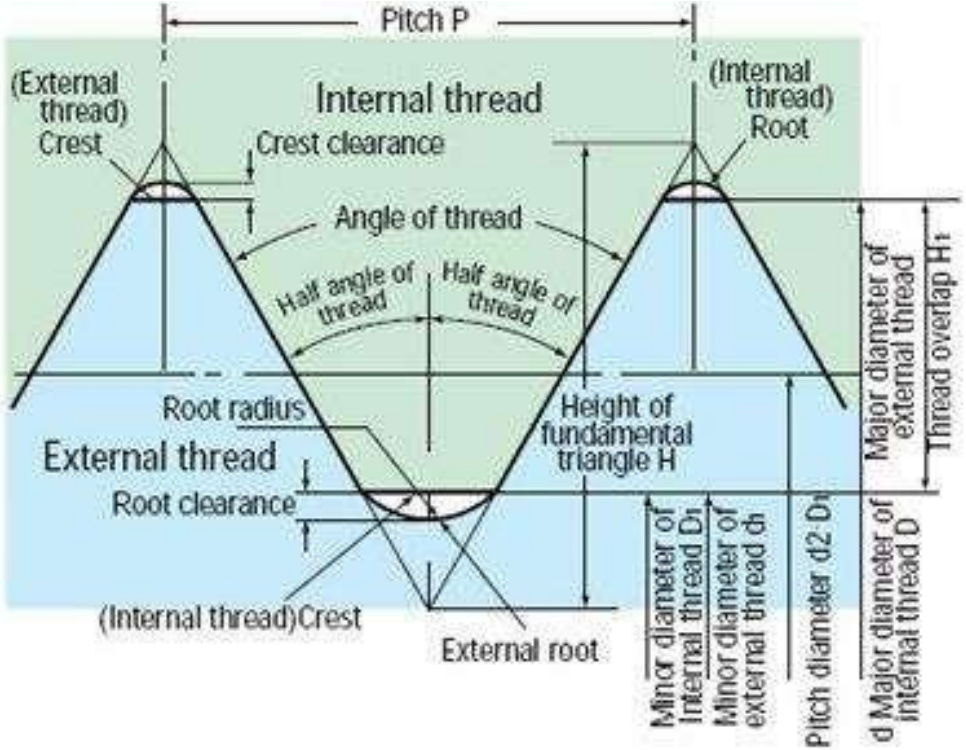

Key is used to transmit torque between shaft and the component mounted on the shaft.
Square and flat keys are most common.

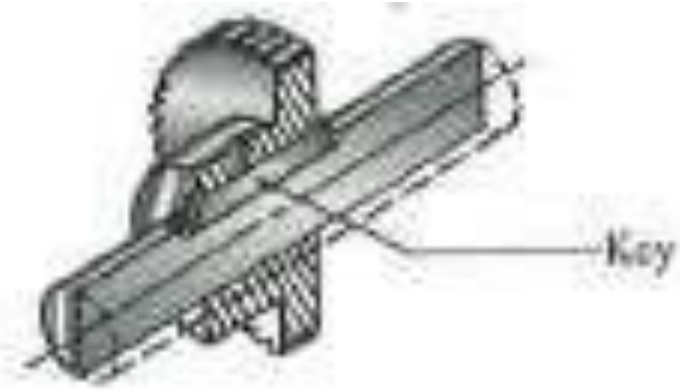

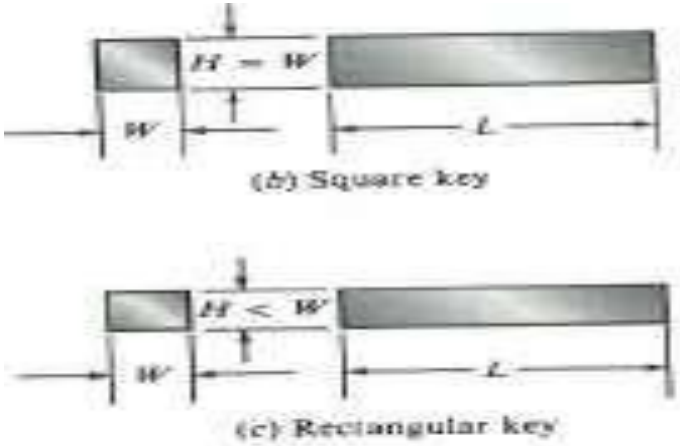

TYPES OF KEYS

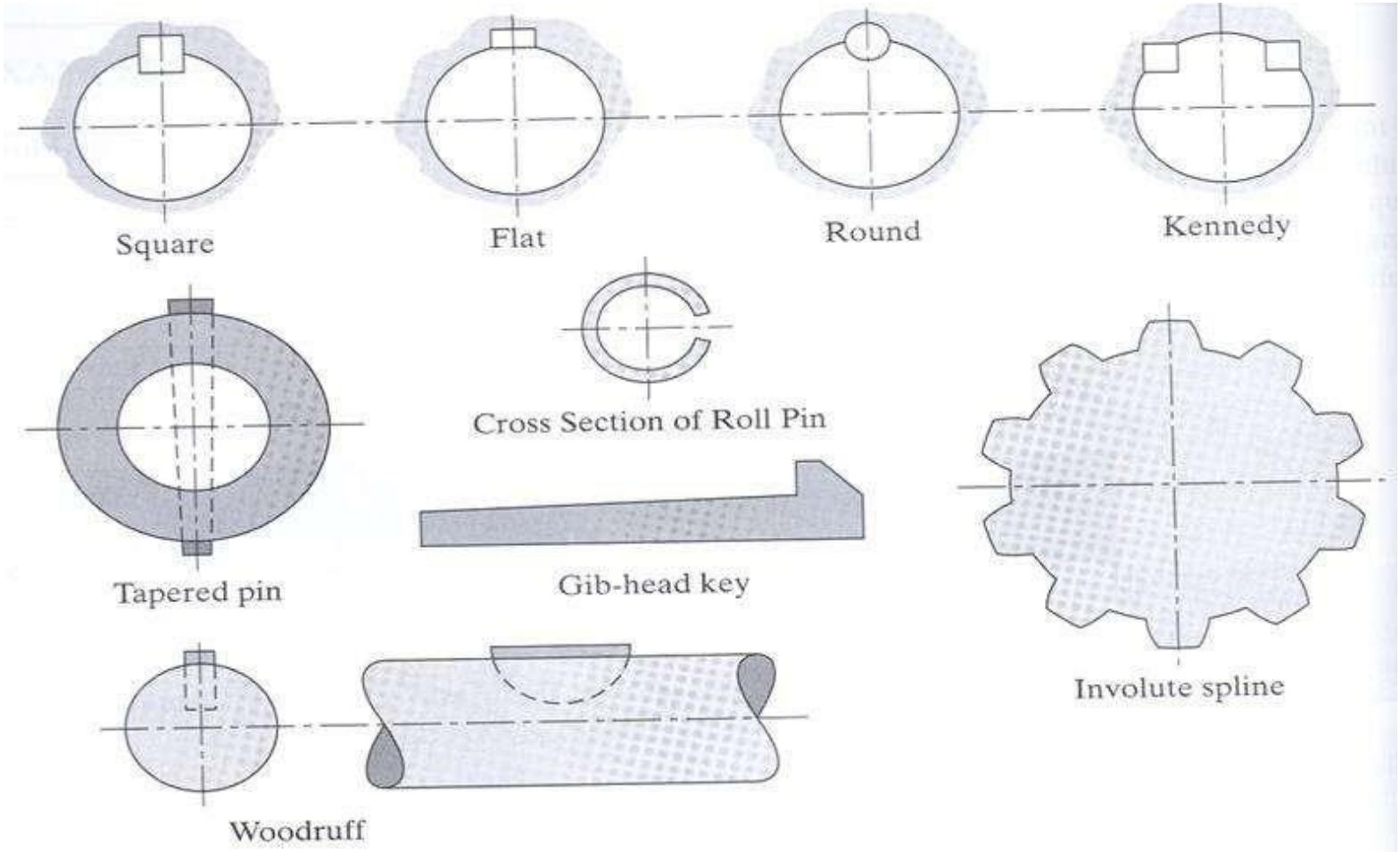

Stresses acting on keys

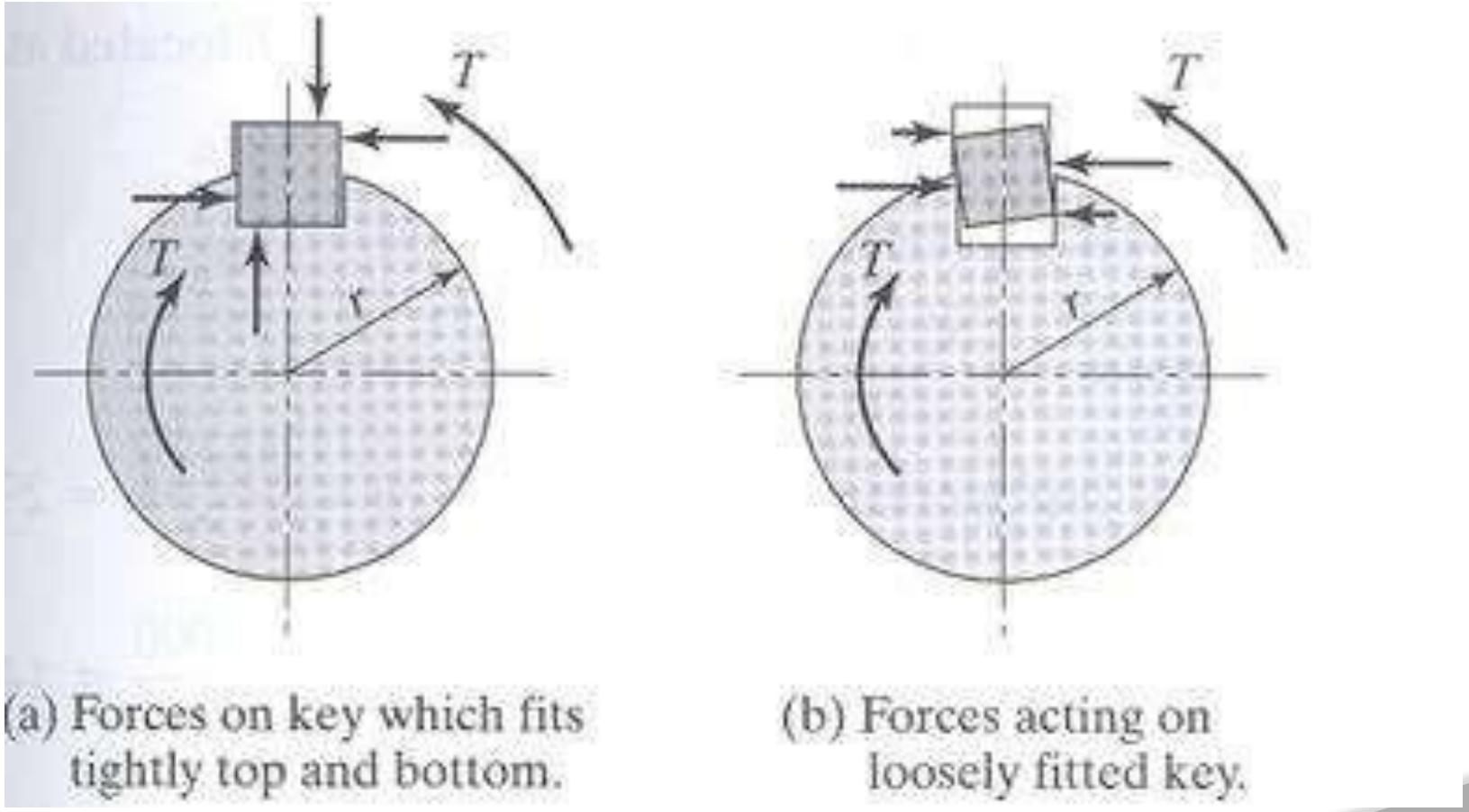

(a) Forces on key which fits tightly top and bottom.

(b) Forces acting on loosely fitted key.

Simplified mechanical stresses equations for shear and compression

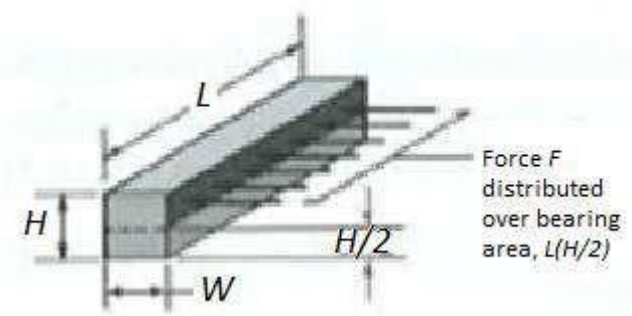

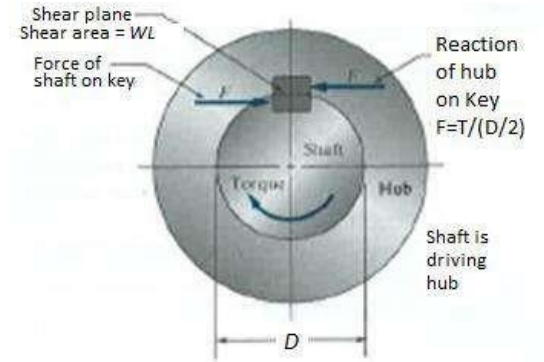

Tangential Force at shaft diameter: F= T/(D/2) = 2T/D

Average shear stress t in Key, should not exceed allowable shear stress $t_w = t_{yp}/N_{fs}$

$$t = F/(W*L) < t_{yp}/N_{fs}$$

$$\text{or, } F/(W*L) < s_{yp}/(2N_{fs}) \text{ .....(1)}$$

Average bearing (compressive) stress s in Key, should not exceed compressive stress $s_w = s_{yp}/N_{fs}$

$$s = F/[(H/2)*L] < s_{yp}/N_{fs}$$

$$\text{or, } s = F/(H*L) < s_{yp}/(2N_{fs}) \text{.....(2)}$$

For square key, W=H, Equation (1) and (2) are essentially same, i.e., shear or bearing stress will produce the same key length.

a. Tapered key – can install after hub (gear) is installed over shaft.

b. Gib head key – ease of extraction

c. Pin keys – low stress concentration

d. Woodruff key – light loading offers ease of assembly

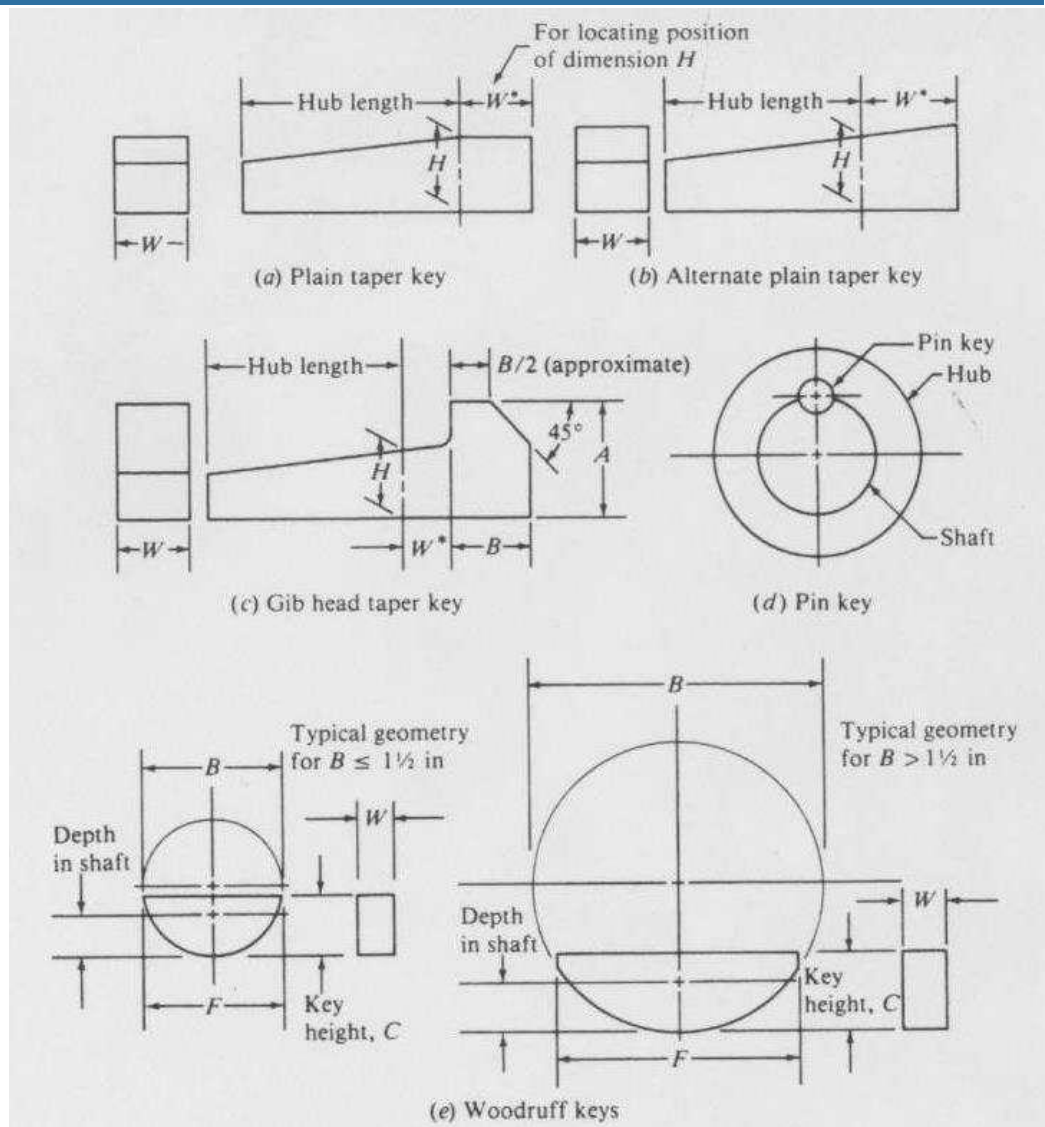

*Note: Plain and gib head taper keys have a 1/8″ taper in 12″.

Design of Keys – stress analysis

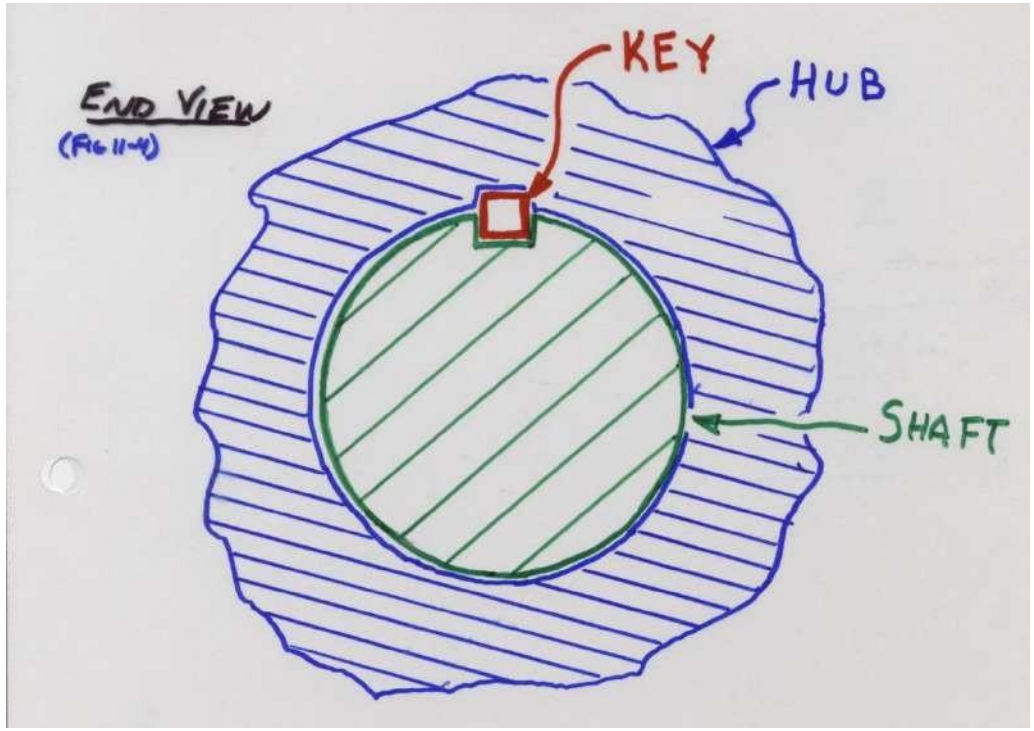

=

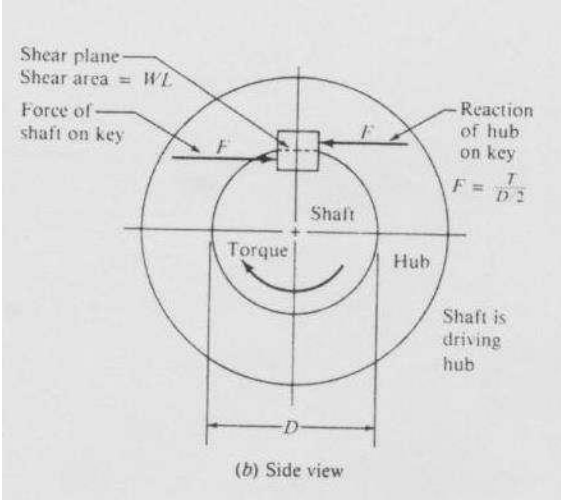

No load

Torque being transmitted

T = F/(D/2) or F = T/(D/2) this is the force the key must react!!!

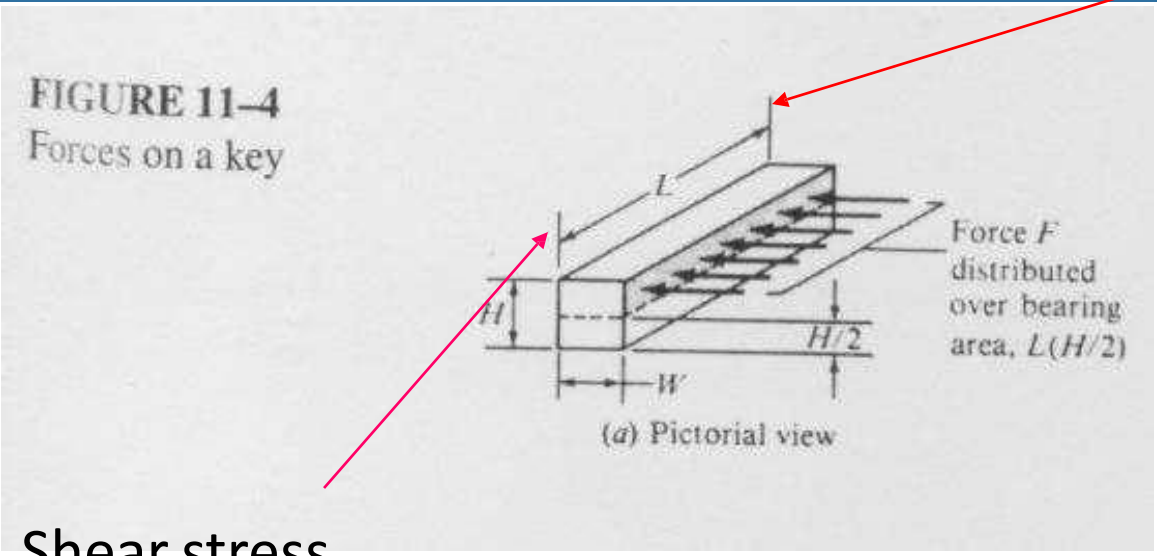

Bearing stress

Shear stress

Required Length based on Shear Stress:

$$L = \frac{2T}{\tau_d DW} \qquad where\ \tau_d = 0.5Sy/N$$

Required Length based on Bearing Stress:

$$L = \frac{4T}{\sigma_d DH} \qquad where\ \sigma_d = Sy/N$$

Typical parameters for keys:

N = 3, material 1020 CD (Sy = 21,000 psi)

UNIT III
DESIGN OF SHAFTS & SHAFT COUPLINGS

DESIGN OF SHAFTS

A shaft is a rotating member usually of circular cross-section (solid or hollow), which transmits power and rotational motion.

Machine elements such as gears, pulleys (sheaves), flywheels, clutches, and sprockets are mounted on the shaft and are used to transmit power frOm the driving device (motor or engine) through a machine

Pr.ess fit, keys, dowel, pins and splines are used to attach these machine elements on the shaft.

The shaft rotates on rolling contact bearings or bush bearings.

Various types of retaining rings, thrust bearings, grooves and steps in the shaft are used to take up axial loads and locate the rotating elements.

Couplings are used to transmit power from drive shaft (e.g., motor) to the driven shaft (e.g. gearbox, wheels).

- Shaft?
- Shaft Design
- ASME Shaft Equations
- Design of Shaft for Torsional Rigidity
- Standard Sizes of Shafts
- Bending and Torsional Moments

The connecting shaft is loaded primarily in torsion.

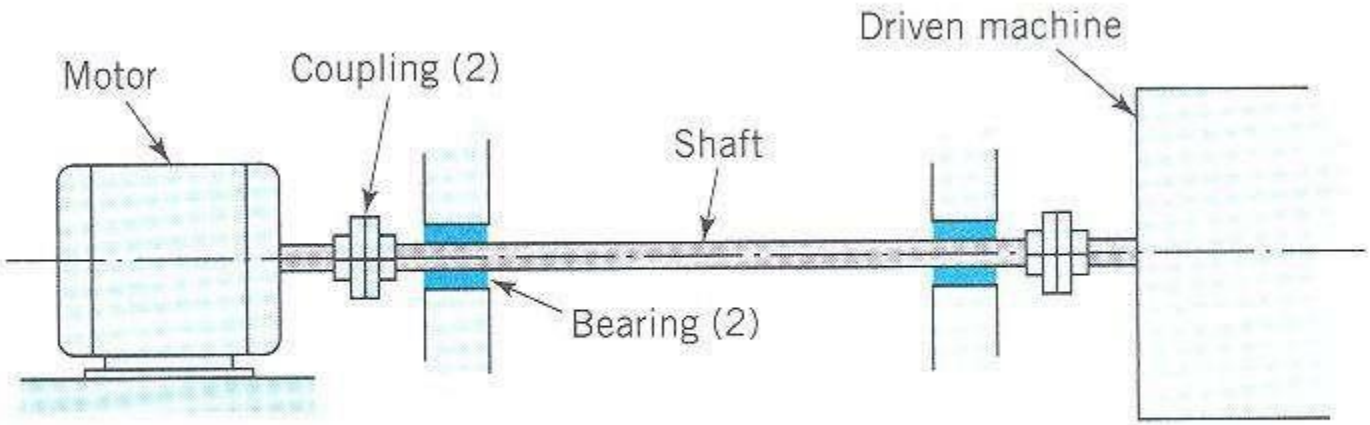

(*a*) Connecting shaft

INTRODUCTION

A shaft is a rotating machine element which is used to transmit power from one place to another. The power is delivered to the shaft by some tangential force and the resultant torque (or twisting moment) set up within the shaft permits the power to be transferred to various machines linked up to the shaft.

In order to transfer the power from one shaft to another, the various members such as pulleys, gears etc., are mounted on it. These members along with the forces exerted upon them causes the shaft to bending.

In other words, we may say that ***a shaft is used for the transmission of torque and bending moment***. The various members are mounted on the shaft by means of keys or splines.

1. **The shafts are usually cylindrical,** but may be square or cross-shaped in section. They are solid in cross-section but sometimes hollow shafts are also used.

2. **An *axle,*** though similar in shape to the shaft, is a stationary machine element and is used for the transmission of bending moment only. It simply acts as a support for some rotating body such as hoisting drum, a car wheel or a rope sheave.

3. **A *spindle*** is a short shaft that imparts motion either to a cutting tool (e.g. drill press spindles) or to a work piece (*e.g. lathe spindles).*

MATERIAL USED FOR SHAFTS

The material used for shafts should have the following properties :

1. It should have high strength.
2. It should have good machinability.
3. It should have low notch sensitivity factor.
4. It should have good heat treatment properties.
5. It should have high wear resistant properties.

The material used for ordinary shafts is carbon steel of grades 40 C 8, 45 C 8, 50 C 4 and 50 C 12.

The mechanical properties of these grades of carbon steel are given in the following table.

Table 14.1. Mechanical properties of steels used for shafts.

Indian standard designation	*Ultimate tensile strength, MPa*	*Yield strength, MPa*
40 C 8	560 - 670	320
45 C 8	610 - 700	350
50 C 4	640 - 760	370
50 C 12	700 Min.	390

MANUFACTURING OF SHAFTS

When a shaft of high strength is required, then an alloy steel such as Nickel, Nickel-Chromium or Chrome-Vanadium steel is used.

Shafts are generally manufactured by **hot rolling** and finished to size by **cold drawing or turning and grinding.**

The cold rolled shafts are stronger than hot rolled shafts but with higher residual stresses.

The residual stresses may cause distortion of the shaft when it is machined, especially when slots or keyways are cut.

Shafts of larger diameter are usually forged and turned to size in a lathe.

TYPES OF SHAFTS

The following two types of shafts are important from the subject point of view

1.Transmission shafts. These shafts transmit power between the source and the machines absorbing power. The counter shafts, line shafts, over head shafts and all factory shafts are transmission shafts. Since these shafts carry machine parts such as pulleys, gears etc., therefore they are subjected to bending in addition to twisting.

2.Machine shafts. These shafts form an integral part of the machine itself. The crank shaft is an example of machine shaft.

Standard Sizes of Transmission Shafts

The standard sizes of transmission shafts are :

1) 25 mm to 60 mm with 5 mm steps;

2) 60 mm to 110 mm with 10 mm steps ;

3) 110 mm to 140 mm with 15 mm steps ; and

4) 140 mm to 500 mm with 20 mm steps.

The standard length of the shafts are 5 m, 6 m and 7 m.

Stresses in Shafts

The following stresses are induced in the shafts :

1.Shear stresses due to the transmission of torque *to torsional load).*

2.Bending stresses (tensile or compressive) due to the forces acting upon machine elements like gears, pulleys etc. as well as due to the weight of the shaft itself.

3. Stresses due to combined torsional and bending loads.

Maximum Permissible Working Stresses for Transmission Shafts

According to American Society of Mechanical Engineers (ASME) code for the design of transmission shafts, the maximum permissible working stresses in tension or compression may be taken as

(a)112 MPa for shafts without allowance for keyways.

(b)84 MPa for shafts with allowance for keyways.

For shafts purchased under definite physical specifications, the permissible tensile stress (σt) may be taken as 60 percent of the elastic limit in tension (σel), *but not more than 36 per cent of the* ultimate tensile strength (σu). *In other words, the permissible tensile stress,*

$$\sigma t = 0.6\ \sigma el \text{ or } 0.36\ \sigma u, \text{ whichever is less.}$$

- The maximum permissible shear stress may be taken as

(a)56 MPa for shafts without allowance for key ways.

(b)42 MPa for shafts with allowance for keyways.

- For shafts purchased under definite physical specifications, the permissible shear stress (τ) may be taken as 30 per cent of the elastic limit in tension (σ*el) but not more than 18 percent of the ultimate* tensile strength (σ*u). In other words, the permissible shear stress,*

  - τ = 0.3 σ*el or 0.18 σu, whichever is less.*

The shafts may be designed on the basis of
1. Strength, and 2. Rigidity and stiffness.

In designing shafts on the basis of strength, the following cases may be considered :

(a) Shafts subjected to twisting moment or torque only,
(b) Shafts subjected to bending moment only,
(c) Shafts subjected to combined twisting and bending moments, and
(d) Shafts subjected to axial loads in addition to combined torsional and bending loads.

We shall now discuss the above cases, in detail, in the following pages.

Shafts Subjected to Twisting Moment Only

When the shaft is subjected to a twisting moment (or torque) only, then the diameter of the shaft may be obtained by using the torsion equation. We know that

...(i) $$\frac{T}{J} = \frac{\tau}{r}$$

Where,

T = Twisting moment (or torque) acting upon the shaft,

J = Polar moment of inertia of the shaft about the axis of rotation,

τ = Torsional shear stress, and

r = Distance from neutral axis to the outer most fibre

= d / 2; where d is the diameter of the shaft.

We know that for round solid shaft, polar moment of inertia,

$$J = \frac{\pi}{32} \times d^4$$

The equation (i) may now be written as

$$\frac{T}{\frac{\pi}{32} \times d^4} = \frac{\tau}{\frac{d}{2}} \quad \text{or} \quad T = \frac{\pi}{16} \times \tau \times d^3 \qquad ..(ii)$$

From this equation, we may determine the diameter of round solid shaft (d).

We also know that for hollow shaft, polar moment of inertia,

$$J = \frac{\pi}{32}\left[(d_o)^4 - (d_i)^4\right]$$

where do and di = Outside and inside diameter of the shaft, and r = do / 2.

$$\frac{T}{\frac{\pi}{32}\left[(d_o)^4 - (d_i)^4\right]} = \frac{\tau}{\frac{d_o}{2}} \quad \text{or} \quad T = \frac{\pi}{16} \times \tau \left[\frac{(d_o)^4 - (d_i)^4}{d_o}\right] \qquad ...(iii)$$

Substituting these values in equation (i), we have

Let k = Ratio of inside diameter and outside diameter of the shaft = di / do

Now the equation (iii) may be written as

...(*iv*)

From the equations (***iii) or (iv), the outside and inside diameter of a hollow shaft may be***
determined.
It may be noted that
1. The hollow shafts are usually used in marine work. These shafts are stronger per kg of material and they may be forged on a mandrel, thus making the material more homogeneous thanwould be possible for a solid shaft.
When a hollow shaft is to be made equal in strength to a solid shaft, the twisting moment of both the shafts must be same. In other words, for the same material of both the shafts,

$$T = \frac{\pi}{16} \times \tau \left[\frac{(d_o)^4 - (d_i)^4}{d_o} \right] = \frac{\pi}{16} \times \tau \times d^3$$

$$\therefore \quad \frac{(d_o)^4 - (d_i)^4}{d_o} = d^3 \quad \text{or} \quad (d_o)^3 (1 - k^4) = d^3$$

2. The twisting moment (*T) may be obtained by using the following relation :*
We know that the power transmitted (in watts) by the shaft,

$$P = \frac{2\pi N \times T}{60} \quad \text{or} \quad T = \frac{P \times 60}{2\pi N}$$

where T = Twisting moment in N-m, and N = Speed of the shaft in r.p.m.

3. In case of belt drives, the twisting moment (*T) is given by*

$$T = (T1 - T2)\ R$$

where
T1 and T2 = Tensions in the tight side and slack side of the belt respectively, and R = Radius of the pulley.

Example 1.

A line shaft rotating at 200 r.p.m. is to transmit 20 kW. The shaft may be assumed to be made of mild steel with an allowable shear stress of 42 MPa. Determine the diameter of the shaft, neglecting the bending moment on the shaft.

Solution.

Given : N = 200 r.p.m. ; P = 20 kW = 20 × 103 W; τ = 42 MPa = 42 N/mm2

Let d = Diameter of the shaft.

We k

$$T = \frac{P \times 60}{2\pi N} = \frac{20 \times 10^3 \times 60}{2\pi \times 200} = 955 \text{ N-m} = 955 \times 10^3 \text{ N-mm},$$

We also know that torque transmitted by the shaft (T),

$$955 \times 10^3 = \frac{\pi}{16} \times \tau \times d^3 = \frac{\pi}{16} \times 42 \times d^3 = 8.25\ d^3$$

$$\therefore \quad d^3 = 955 \times 10^3 / 8.25 = 115\ 733 \text{ or } d = 48.7 \text{ say } 50 \text{ mm Ans.}$$

Example 2.

A solid shaft is transmitting 1 MW at 240 r.p.m. Determine the diameter of the shaft if the maximum torque transmitted exceeds the mean torque by 20%. Take the maximum allowable shear stress as 60 MPa.

Solution.

Given : $P = 1\ MW = 1 \times 106\ W$; $N = 240$ r.p.m. ; $T_{max} = 1.2\ T_{mean}$;

$\tau = 60\ MPa = 60\ N/mm^2$

Let d = *Diameter of the shaft.*

We know that mean torque transmitted by the shaft,

$$T_{mean} = \frac{P \times 60}{2\pi N} = \frac{1 \times 10^6 \times 60}{2\pi \times 240} = 39\ 784 \text{ N-m} = 39\ 784 \times 10^3 \text{ N-mm}$$

Maximum torque transmitted,

$T_{max} = 1.2\ T_{mean} = 1.2 \times 39\ 784 \times 10^3 = 47\ 741 \times 10^3$ N-mm

We know that maximum torque transmitted (T_{max}),

$$47\ 741 \times 10^3 = \frac{\pi}{16} \times \tau \times d^3 = \frac{\pi}{16} \times 60 \times d^3 = 11.78\ d^3$$

$$d^3 = 47\ 741 \times 10^3 / 11.78 = 4053 \times 10^3$$

$$d = 159.4 \text{ say } 160 \text{ mm}$$ Ans.

Example 3.

Find the diameter of a solid steel shaft to transmit 20 kW at 200 r.p.m. The ultimate shear stress for the steel may be taken as 360 MPa and a factor of safety as 8. If a hollow shaft is to be used in place of the solid shaft, find the inside and outside diameter when the ratio of inside to outside diameters is 0.5.

Solution. Given : P = 20 kW = 20 × 10^3 W ; N = 200 r.p.m. ; τu = 360 MPa = 360 N/mm^2 ; F.S. = 8 ; k = di / do = 0.5

We know that the allowable shear stress,

$$\tau = \frac{\tau_u}{F.S.} = \frac{360}{8} = 45 \text{ N/mm}^2$$

Diameter of the solid shaft

Let *d = Diameter of the solid shaft.*

We know that torque transmitted by the shaft,

$$T = \frac{P \times 60}{2\pi N} = \frac{20 \times 10^3 \times 60}{2\pi \times 200} = 955 \text{ N-m} = 955 \times 10^3 \text{ N-mm}$$

We also know that torque transmitted by the solid shaft (*T*),

$$955 \times 10^3 = \frac{\pi}{16} \times \tau \times d^3 = \frac{\pi}{16} \times 45 \times d^3 = 8.84\, d^3$$

$$d^3 = 955 \times 10^3 / 8.84 = 108\,032 \quad \text{or} \quad d = 47.6 \text{ say } 50 \text{ mm Ans.}$$

Diameter of hollow shaft

Let *di = Inside diameter, and*

do = Outside diameter.

We know that the torque transmitted by the hollow shaft (*T*),

$$955 \times 10^3 = \frac{\pi}{16} \times \tau\,(d_o)^3\,(1 - k^4)$$

$$= \frac{\pi}{16} \times 45\,(d_o)^3\,[1 - (0.5)^4] = 8.3\,(d_o)^3$$

$$(d_o)^3 = 955 \times 10^3 / 8.3 = 115\,060 \quad \text{or} \quad d_o = 48.6 \text{ say } 50 \text{ mm Ans.}$$

$$d_i = 0.5\,d_o = 0.5 \times 50 = 25 \text{ mm Ans.}$$

Shafts Subjected to Bending Moment Only

When the shaft is subjected to a bending moment only, then the maximum stress (tensile or compressive) is given by the bending equation. We know that

$$\frac{M}{I} = \frac{\sigma_b}{y} \qquad ...(i)$$

where *M = Bending moment,*
I = Moment of inertia of cross-sectional area of the shaft about the axis of rotation,
σb = Bending stress, and
y = Distance from neutral axis to the outer-most fibre.

We know that for a round solid shaft, moment of inertia,

$$I = \frac{\pi}{64} \times d^4 \quad \text{and} \quad y = \frac{d}{2}$$

Substituting these values in equation (i), we have

$$\frac{M}{\frac{\pi}{64} \times d^4} = \frac{\sigma_b}{\frac{d}{2}} \quad \text{or} \quad M = \frac{\pi}{32} \times \sigma_b \times d^3$$

From this equation, diameter of the solid shaft (d) may be obtained.

We also know that for a hollow shaft, moment of inertia,

$$I = \frac{\pi}{64}\left[(d_o)^4 - (d_i)^4\right] = \frac{\pi}{64}(d_o)^4\,(1 - k^4) \qquad \text{...(where } k = d_i / d_o\text{)}$$

$$y = d_o / 2$$

Again substituting these values in equation ***(i), we have***

$$\frac{M}{\frac{\pi}{64}(d_o)^4\,(1 - k^4)} = \frac{\sigma_b}{\frac{d_o}{2}} \qquad \text{or} \qquad M = \frac{\pi}{32} \times \sigma_b\,(d_o)^3\,(1 - k^4)$$

From this equation, the outside diameter of the shaft (do) may be obtained.

A pair of wheels of a railway wagon carries a load of 50 kN on each axle box, acting at a distance of 100 mm outside the wheel base. The gauge of the rails is 1.4 m. Find the diameter of the axle between the wheels, if the stress is not to exceed 100 MPa.

Solution.

Given : $W = 50\ kN = 50 \times 10^3\ N$; $L = 100\ mm$; $x = 1.4\ m$; $\sigma b = 100\ MPa = 100\ N/mm^2$

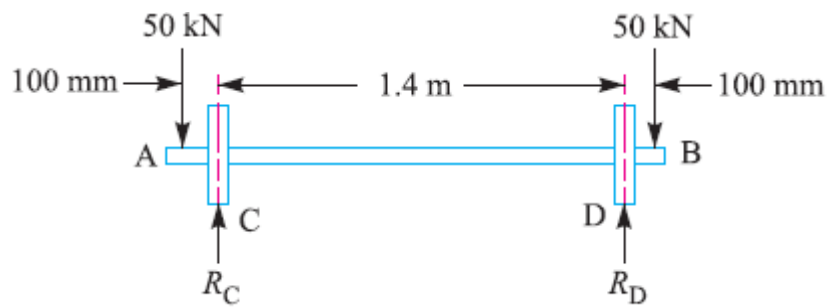

The axle with wheels is shown in Fig. 1.

A little consideration will show that the maximum bending moment acts on the wheels at C and D. Therefore maximum bending moment,

*$M = W.L = 50 \times 10^3 \times 100 = 5 \times 10^6$ N-mm

The maximum B.M. may be obtained as follows :

$RC = RD = 50\ kN = 50 \times 10^3\ N$

B.M. at A, $MA = 0$

B.M. at C, $MC = 50 \times 10^3 \times 100 = 5 \times 10^6\ N\text{-}mm$

B.M. at D, $MD = 50 \times 10^3 \times 1500 - 50 \times 10^3 \times 1400 = 5 \times 10^6\ N\text{-}mm$

B.M. at B, $MB = 0$

Let d = Diameter of the axle.
We know that the maximum bending moment (M),

$$5 \times 10^6 = \frac{\pi}{32} \times \sigma_b \times d^3 = \frac{\pi}{32} \times 100 \times d^3 = 9.82\, d^3$$

$$d^3 = 5 \times 10^6 / 9.82 = 0.51 \times 10^6 \text{ or } d = 79.8 \text{ say } 80 \text{ mm}$$ **Ans.**

Shafts Subjected to Combined Twisting Moment and Bending Moment

When the shaft is subjected to combined twisting moment and bending moment, then the shaft must be designed on the basis of the two moments simultaneously. Various theories have been suggested to account for the elastic failure of the materials when they are subjected to various types of combined stresses. The following two theories are important from the subject point of view :

1. **Maximum shear stress theory or Guest's theory**. It is used for ductile materials such as mild steel.
2. **Maximum normal stress theory or Rankine's theory.** It is used for brittle materials such as cast iron.

Let

τ = Shear stress induced due to twisting moment, and

σb = *Bending stress (tensile or compressive) induced due to bending* moment.

According to maximum shear stress theory, the maximum shear stress in the shaft,

$$\tau_{max} = \frac{1}{2}\sqrt{(\sigma_b)^2 + 4\tau^2}$$

$$\tau_{max} = \frac{1}{2}\sqrt{\left(\frac{32M}{\pi d^3}\right)^2 + 4\left(\frac{16T}{\pi d^3}\right)^2} = \frac{16}{\pi d^3}\left[\sqrt{M^2 + T^2}\right]$$

$$\frac{\pi}{16} \times \tau_{max} \times d^3 = \sqrt{M^2 + T^2}$$

The expression $\sqrt{M^2 + T^2}$ is known as ***equivalent twisting moment*** and is denoted by T_e. The equivalent twisting moment may be defined as that twisting moment, which when acting alone, produces the same shear stress (τ) as the actual twisting moment. By limiting the maximum shear stress (τ_{max}) equal to the allowable shear stress (τ) for the material, the equation *(i)* may be written as

$$T_e = \sqrt{M^2 + T^2} = \frac{\pi}{16} \times \tau \times d^3 \qquad \text{...(ii)}$$

From this expression, diameter of the shaft (d) may be evaluated.

Now according to maximum normal stress theory, the maximum normal stress in the shaft,

$$\sigma_{b(max)} = \frac{1}{2}\sigma_b + \frac{1}{2}\sqrt{(\sigma_b)^2 + 4\tau^2} \qquad \text{...(iii)}$$

$$= \frac{1}{2} \times \frac{32M}{\pi d^3} + \frac{1}{2}\sqrt{\left(\frac{32M}{\pi d^3}\right)^2 + 4\left(\frac{16T}{\pi d^3}\right)^2}$$

$$= \frac{32}{\pi d^3}\left[\frac{1}{2}\left(M + \sqrt{M^2 + T^2}\right)\right]$$

or

$$\frac{\pi}{32} \times \sigma_{b\,(max)} \times d^3 = \frac{1}{2}\left[M + \sqrt{M^2 + T^2}\right] \qquad \text{...(iv)}$$

The expression $\frac{1}{2}\left[(M + \sqrt{M^2 + T^2})\right]$ is known as ***equivalent bending moment*** and is denoted by M_e. The equivalent bending moment may be defined as **that moment which when acting alone produces the same tensile or compressive stress (σ_b) as the actual bending moment.** By limiting the maximum normal stress $[\sigma_{b(max)}]$ equal to the allowable bending stress (σ_b), then the equation (*iv*) may be written as

$$M_e = \frac{1}{2}\left[M + \sqrt{M^2 + T^2}\right] = \frac{\pi}{32} \times \sigma_b \times d^3 \qquad \text{...(v)}$$

From this expression, diameter of the shaft (d) may be evaluated.

Notes: 1. In case of a hollow shaft, the equations (*ii*) and (*v*) may be written as

$$T_e = \sqrt{M^2 + T^2} = \frac{\pi}{16} \times \tau\,(d_o)^3\,(1 - k^4)$$

and

$$M_e = \tfrac{1}{2}\left(M + \sqrt{M^2 + T^2}\right) = \frac{\pi}{32} \times \sigma_b\,(d_o)^3\,(1 - k^4)$$

2. It is suggested that diameter of the shaft may be obtained by using both the theories and the larger of the two values is adopted.

Example 5.

A solid circular shaft is subjected to a bending moment of 3000 N-m and a torque of 10 000 N-m. The shaft is made of 45 C 8 steel having ultimate tensile stress of 700 MPa and a ultimate shear stress of 500 MPa. Assuming a factor of safety as 6, determine the diameter of the shaft.

Solution. Given : $M = 3000$ N-m $= 3 \times 10^6$ N-mm ; $T = 10\ 000$ N-m $= 10 \times 10^6$ N-mm ; $\sigma_{tu} = 700$ MPa $= 700$ N/mm^2 ; $\tau_u = 500$ MPa $= 500$ N/mm^2

We know that the allowable tensile stress,

$$\sigma_t \text{ or } \sigma_b = \frac{\sigma_{tu}}{F.S.} = \frac{700}{6} = 116.7 \text{ N/mm}^2$$

and allowable shear stress,

$$\tau = \frac{\tau_u}{F.S.} = \frac{500}{6} = 83.3 \text{ N/mm}^2$$

Let d = Diameter of the shaft in mm.

According to maximum shear stress theory, equivalent twisting moment,

$$T_e = \sqrt{M^2 + T^2} = \sqrt{(3 \times 10^6)^2 + (10 \times 10^6)^2} = 10.44 \times 10^6 \text{ N-mm}$$

We also know that equivalent twisting moment (T_e),

$$10.44 \times 10^6 = \frac{\pi}{16} \times \tau \times d^3 = \frac{\pi}{16} \times 83.3 \times d^3 = 16.36\ d^3$$

$$\therefore \quad d^3 = 10.44 \times 10^6 / 16.36 = 0.636 \times 10^6 \text{ or } d = 86 \text{ mm}$$

According to maximum normal stress theory, equivalent bending moment,

$$M_e = \frac{1}{2}\left(M + \sqrt{M^2 + T^2}\right) = \frac{1}{2}(M + T_e)$$

$$= \frac{1}{2}(3 \times 10^6 + 10.44 \times 10^6) = 6.72 \times 10^6 \text{ N-mm}$$

We also know that the equivalent bending moment (M_e),

$$6.72 \times 10^6 = \frac{\pi}{32} \times \sigma_b \times d^3 = \frac{\pi}{32} \times 116.7 \times d^3 = 11.46\, d^3$$

$\therefore$ $$d^3 = 6.72 \times 10^6 / 11.46 = 0.586 \times 10^6 \text{ or } d = 83.7 \text{ mm}$$

Taking the larger of the two values, we have

$$d = 86 \text{ say } 90 \text{ mm}$$ Ans.

Example 6.

A shaft supported at the ends in ball bearings carries a straight tooth spur gear at its mid span and is to transmit 7.5 kW at 300 r.p.m. The pitch circle diameter of the gear is 150 mm. The distances between the centre line of bearings and gear are 100 mm each. If the shaft is made of steel and the allowable shear stress is 45 MPa, determine the diameter of the shaft. Show in a sketch how the gear will be mounted on the shaft; also indicate the ends where the bearings will be mounted?

The pressure angle of the gear may be taken as 20°.

Solution. Given : $P = 7.5$ kW $= 7500$ W ; $N = 300$ r.p.m. ; $D = 150$ mm $= 0.15$ m ; $L = 200$ mm $= 0.2$ m ; $\tau = 45$ MPa $= 45$ N/mm^2 ; $\alpha = 20°$

Fig. 14.2 shows a shaft with a gear mounted on the bearings.

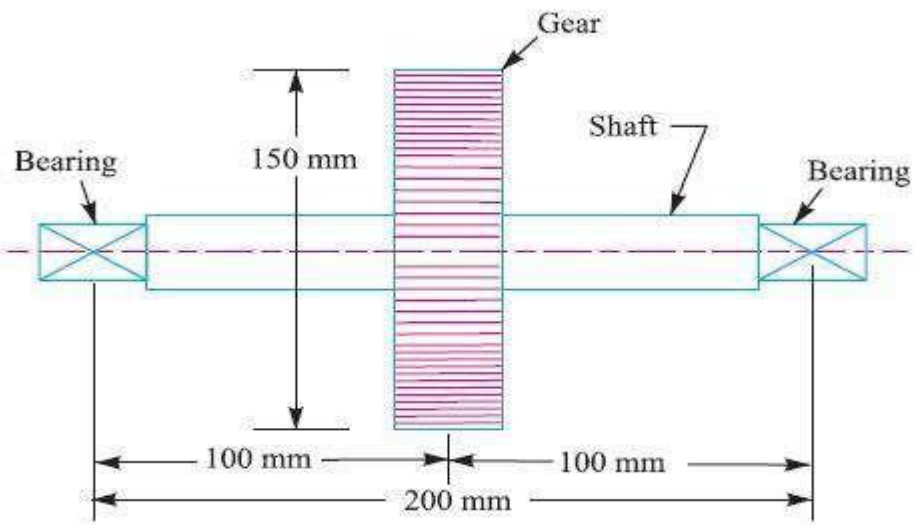

Fig. 14.2

We know that torque transmitted by the shaft,

$$T = \frac{P \times 60}{2\pi N} = \frac{7500 \times 60}{2\pi \times 300} = 238.7 \text{ N-m}$$

∴ Tangential force on the gear,

$$F_t = \frac{2T}{D} = \frac{2 \times 238.7}{0.15} = 3182.7 \text{ N}$$

and the normal load acting on the tooth of the gear,

$$W = \frac{F_t}{\cos\alpha} = \frac{3182.7}{\cos 20°} = \frac{3182.7}{0.9397} = 3387 \text{ N}$$

Since the gear is mounted at the middle of the shaft, therefore maximum bending moment at the centre of the gear,

$$M = \frac{W.L}{4} = \frac{3387 \times 0.2}{4} = 169.4 \text{ N-m}$$

Let d = Diameter of the shaft.

We know that equivalent twisting moment,

$$T_e = \sqrt{M^2 + T^2} = \sqrt{(169.4)^2 + (238.7)^2} = 292.7 \text{ N-m}$$

$$= 292.7 \times 10^3 \text{ N-mm}$$

We also know that equivalent twisting moment (T_e),

$$292.7 \times 10^3 = \frac{\pi}{16} \times \tau \times d^3 = \frac{\pi}{16} \times 45 \times d^3 = 8.84\ d^3$$

∴ $d^3 = 292.7 \times 10^3 / 8.84 = 33 \times 10^3$ or $d = 32$ say 35 mm Ans.

Example 14.7. *A shaft made of mild steel is required to transmit 100 kW at 300 r.p.m. The supported length of the shaft is 3 metres. It carries two pulleys each weighing 1500 N supported at a distance of 1 metre from the ends respectively. Assuming the safe value of stress, determine the diameter of the shaft.*

Solution. Given : $P = 100$ kW $= 100 \times 10^3$ W ; $N = 300$ r.p.m. ; $L = 3$ m ; $W = 1500$ N

We know that the torque transmitted by the shaft,

$$T = \frac{P \times 60}{2\pi N} = \frac{100 \times 10^3 \times 60}{2\pi \times 300} = 3183 \text{ N-m}$$

The shaft carrying the two pulleys is like a simply supported beam as shown in Fig. 14.3. The reaction at each support will be 1500 N, *i.e.*

$$R_A = R_B = 1500 \text{ N}$$

A little consideration will show that the maximum bending moment lies at each pulley *i.e.* at C and D.

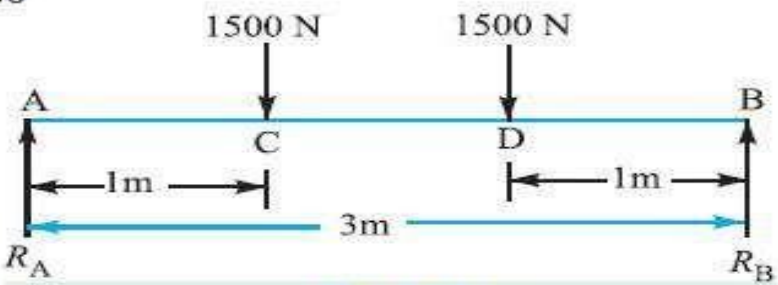

Fig. 14.3

∴ Maximum bending moment,

$$M = 1500 \times 1 = 1500 \text{ N-m}$$

Let d = Diameter of the shaft in mm.

We know that equivalent twisting moment,

$$T_e = \sqrt{M^2 + T^2} = \sqrt{(1500)^2 + (3183)^2} = 3519 \text{ N-m}$$
$$= 3519 \times 10^3 \text{ N-mm}$$

We also know that equivalent twisting moment (T_e),

$$3519 \times 10^3 = \frac{\pi}{16} \times \tau \times d^3 = \frac{\pi}{16} \times 60 \times d^3 = 11.8\, d^3 \quad \text{...(Assuming } \tau = 60 \text{ N/mm}^2\text{)}$$

∴ $d^3 = 3519 \times 10^3 / 11.8 = 298 \times 10^3$ or $d = 66.8$ say 70 mm **Ans.**

Example 8. *A line shaft is driven by means of a motor placed vertically below it. The pulley on the line shaft is 1.5 metre in diameter and has belt tensions 5.4 kN and 1.8 kN on the tight side and slack side of the belt respectively. Both these tensions may be assumed to be vertical. If the pulley be overhang from the shaft, the distance of the centre line of the pulley from the centre line of the bearing being 400 mm, find the diameter of the shaft. Assuming maximum allowable shear stress of 42 MPa.*

Solution .

Given : $D = 1.5$ *m or* $R = 0.75$ *m;* $T1 = 5.4$ *kN* $= 5400$ *N ;* $T2 = 1.8$ *kN* $= 1800$ *N ;*
$L = 400$ *mm ;* $\tau = 42$ *MPa* $= 42$ *N/mm2*

A line shaft with a pulley is shown in Fig 14.4.

We know that torque transmitted by the shaft,

$$T = (T1 - T2)\, R = (5400 - 1800)\, 0.75 = 2700 \text{ N-m}$$

$$= 2700 \times 103 \text{ N-mm}$$

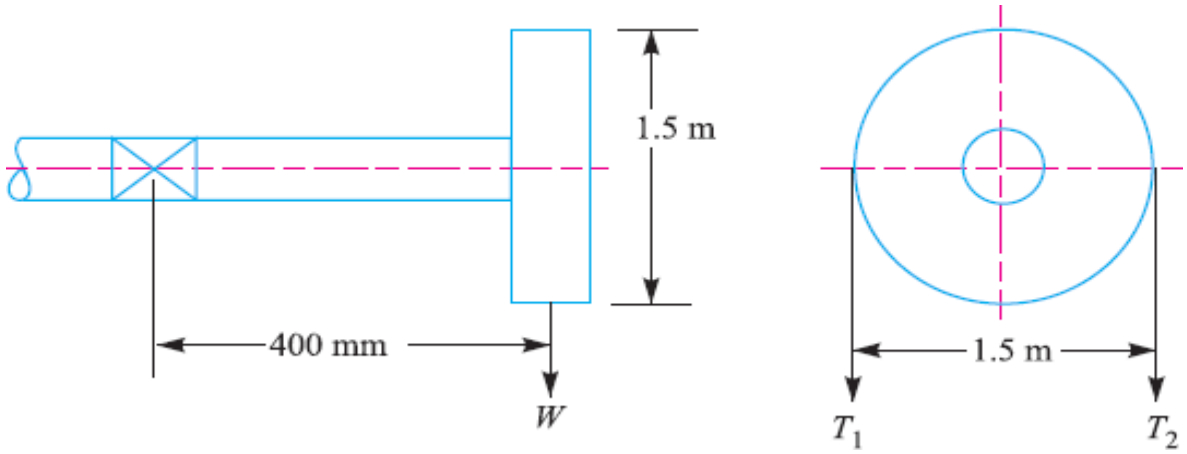
1.5 m
400 mm
W
1.5 m
T_1
T_2

Neglecting the weight of shaft, total vertical load acting on the pulley,

$$W = T_1 + T_2 = 5400 + 1800 = 7200 \text{ N}$$

$\therefore$ Bending moment, $M = W \times L = 7200 \times 400 = 2880 \times 10^3$ N-mm

Let d = Diameter of the shaft in mm.

We know that the equivalent twisting moment,

$$T_e = \sqrt{M^2 + T^2} = \sqrt{(2880 \times 10^3)^2 + (2700 \times 10^3)^2}$$

$$= 3950 \times 10^3 \text{ N-mm}$$

We also know that equivalent twisting moment (T_e),

$$3950 \times 10^3 = \frac{\pi}{16} \times \tau \times d^3 = \frac{\pi}{16} \times 42 \times d^3 = 8.25\, d^3$$

$\therefore$ $d^3 = 3950 \times 10^3/8.25 = 479 \times 10^3$ or $d = 78$ say 80 mm **Ans.**

Example 14.9. *A shaft is supported by two bearings placed 1 m apart. A 600 mm diameter pulley is mounted at a distance of 300 mm to the right of left hand bearing and this drives a pulley directly below it with the help of belt having maximum tension of 2.25 kN. Another pulley 400 mm diameter is placed 200 mm to the left of right hand bearing and is driven with the help of electric motor and belt, which is placed horizontally to the right. The angle of contact for both the pulleys is 180° and $\mu = 0.24$. Determine the suitable diameter for a solid shaft, allowing working stress of 63 MPa in tension and 42 MPa in shear for the material of shaft. Assume that the torque on one pulley is equal to that on the other pulley.*

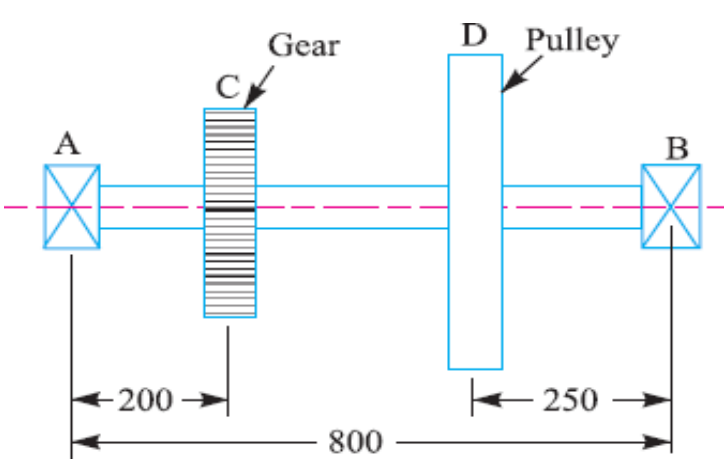

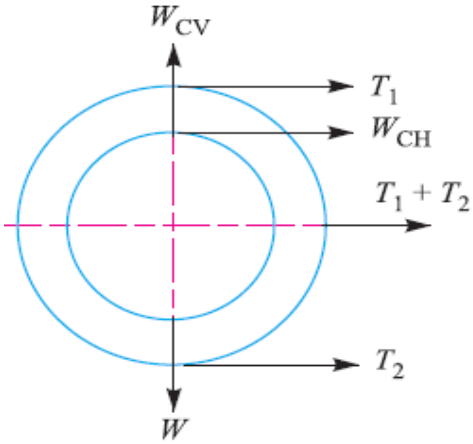

Solution. Given : $AB = 1$ m ; $D_C = 600$ mm or $R_C = 300$ mm = 0.3 m ; $AC = 300$ mm = 0.3 m ; $T_1 = 2.25$ kN = 2250 N ; $D_D = 400$ mm or $R_D = 200$ mm = 0.2 m ; $BD = 200$ mm = 0.2 m ; $\theta = 180° = \pi$ rad ; $\mu = 0.24$; $\sigma_b = 63$ MPa = 63 N/mm^2 ; $\tau = 42$ MPa = 42 N/mm^2

The space diagram of the shaft is shown in Fig. 14.5 (*a*).

Let T_1 = Tension in the tight side of the belt on pulley C = 2250 N ...(Given)

T_2 = Tension in the slack side of the belt on pulley C.

We know that

$$2.3 \log\left(\frac{T_1}{T_2}\right) = \mu.\theta = 0.24 \times \pi = 0.754$$

$$\therefore \quad \log\left(\frac{T_1}{T_2}\right) = \frac{0.754}{2.3} = 0.3278 \quad \text{or} \quad \frac{T_1}{T_2} = 2.127 \qquad \text{...(Taking antilog of 0.3278)}$$

and

$$T_2 = \frac{T_1}{2.127} = \frac{2250}{2.127} = 1058 \text{ N}$$

$\therefore$ Vertical load acting on the shaft at C,

$$W_C = T_1 + T_2 = 2250 + 1058 = 3308 \text{ N}$$

and vertical load on the shaft at D

$$= 0$$

The vertical load diagram is shown in Fig. 14.5 (*c*).

We know that torque acting on the pulley *C*,

$$T = (T_1 - T_2)\, R_C = (2250 - 1058)\, 0.3 = 357.6 \text{ N-m}$$

The torque diagram is shown in Fig. 14.5 (*b*).

Let T_3 = Tension in the tight side of the belt on pulley *D*, and

T_4 = Tension in the slack side of the belt on pulley *D*.

Since the torque on both the pulleys (*i.e.* *C* and *D*) is same, therefore

$$(T_3 - T_4)\, R_D = T = 357.6 \text{ N-m} \quad \text{or} \quad T_3 - T_4 = \frac{357.6}{R_D} = \frac{357.6}{0.2} = 1788 \text{ N} \qquad \text{...(i)}$$

We know that

$$= \frac{T_3}{T_4} = \frac{T_1}{T_2} = 2.127 \quad \text{or} \quad T_3 = 2.127\, T_4 \qquad \text{...(ii)}$$

From equations (*i*) and (*ii*), we find that

$$T_3 = 3376 \text{ N, and } T_4 = 1588 \text{ N}$$

∴ Horizontal load acting on the shaft at *D*,

$$W_D = T_3 + T_4 = 3376 + 1588 = 4964 \text{ N}$$

and horizontal load on the shaft at $C = 0$

The horizontal load diagram is shown in Fig. 14.5 (*d*).

Now let us find the maximum bending moment for vertical and horizontal loading.

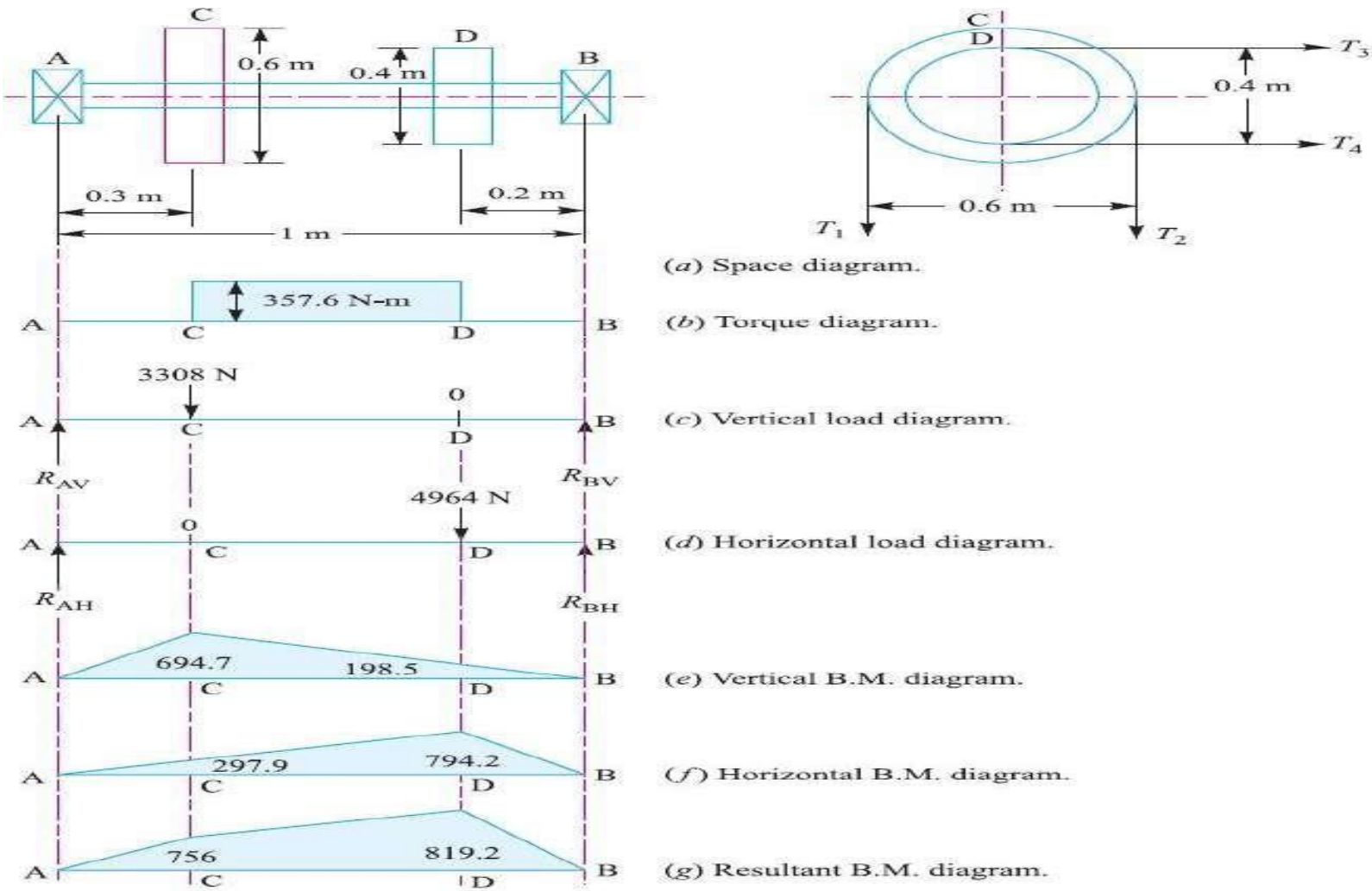

(*a*) Space diagram.

(*b*) Torque diagram.

(*c*) Vertical load diagram.

(*d*) Horizontal load diagram.

(*e*) Vertical B.M. diagram.

(*f*) Horizontal B.M. diagram.

(*g*) Resultant B.M. diagram.

First of all, considering the vertical loading at C. Let R_{AV} and R_{BV} be the reactions at the bearings A and B respectively. We know that

$$R_{AV} + R_{BV} = 3308 \text{ N}$$

Taking moments about A,

$$R_{BV} \times 1 = 3308 \times 0.3 \quad \text{or} \quad R_{BV} = 992.4 \text{ N}$$

and

$$R_{AV} = 3308 - 992.4 = 2315.6 \text{ N}$$

We know that B.M. at A and B,

$$M_{AV} = M_{BV} = 0$$

B.M. at C, $\quad M_{CV} = R_{AV} \times 0.3 = 2315.6 \times 0.3 = 694.7$ N-m

B.M. at D, $\quad M_{DV} = R_{BV} \times 0.2 = 992.4 \times 0.2 = 198.5$ N-m

The bending moment diagram for vertical loading in shown in Fig. 14.5 (e).

Now considering horizontal loading at D. Let R_{AH} and R_{BH} be the reactions at the bearings A and B respectively. We know that

$$R_{AH} + R_{BH} = 4964 \text{ N}$$

Taking moments about A,

$$R_{BH} \times 1 = 4964 \times 0.8 \quad \text{or} \quad R_{BH} = 3971 \text{ N}$$

and

$$R_{AH} = 4964 - 3971 = 993 \text{ N}$$

We know that B.M. at A and B,

$$M_{AH} = M_{BH} = 0$$

B.M. at C, $\quad M_{CH} = R_{AH} \times 0.3 = 993 \times 0.3 = 297.9$ N-m

B.M. at D, $\quad M_{DH} = R_{BH} \times 0.2 = 3971 \times 0.2 = 794.2$ N-m

The bending moment diagram for horizontal loading is shown in Fig. 14.5 (f).

Resultant B.M. at C,

$$M_C = \sqrt{(M_{CV})^2 + (M_{CH})^2} = \sqrt{(694.7)^2 + (297.9)^2} = 756 \text{ N-m}$$

and resultant B.M. at D,

$$M_D = \sqrt{(M_{DV})^2 + (M_{DH})^2} = \sqrt{(198.5)^2 + (794.2)^2} = 819.2 \text{ N-m}$$

The resultant bending moment diagram is shown in Fig. 14.5 (g).

We see that bending moment is maximum at D.

$\therefore$ Maximum bending moment,

$$M = M_D = 819.2 \text{ N-m}$$

Let d = Diameter of the shaft.

We know that equivalent twisting moment,

$$T_e = \sqrt{M^2 + T^2} = \sqrt{(819.2)^2 + (357.6)^2} = 894 \text{ N-m}$$

$$= 894 \times 10^3 \text{ N-mm}$$

We also know that equivalent twisting moment (T_e),

$$894 \times 10^3 = \frac{\pi}{16} \times \tau \times d^3 = \frac{\pi}{16} \times 42 \times d^3 = 8.25\, d^3$$

$\therefore$ $$d^3 = 894 \times 10^3 / 8.25 = 108 \times 10^3 \text{ or } d = 47.6 \text{ mm}$$

Again we know that equivalent bending moment,

$$M_e = \tfrac{1}{2}\left(M + \sqrt{M^2 + T^2}\right) = \tfrac{1}{2}(M + T_e)$$

$$= \tfrac{1}{2}(819.2 + 894) = 856.6 \text{ N-m} = 856.6 \times 10^3 \text{ N-mm}$$

We also know that equivalent bending moment (M_e),

$$856.6 \times 10^3 = \frac{\pi}{32} \times \sigma_b \times d^3 = \frac{\pi}{32} \times 63 \times d^3 = 6.2\, d^3$$

$$\therefore \qquad d^3 = 856.6 \times 10^3/6.2 = 138.2 \times 10^3 \quad \text{or} \quad d = 51.7 \text{ mm}$$

Taking larger of the two values, we have

$$d = 51.7 \text{ say } 55 \text{ mm}$$ Ans.

Shafts Subjected to Fluctuating Loads

In the previous articles we have assumed that the shaft is subjected to constant torque and bending moment. But in actual practice, the shafts are subjected to fluctuating torque and bending moments. In order to design such shafts like line shafts and counter shafts, the combined shock and fatigue factors must be taken into account for the computed *twisting moment* (*T) and bending moment (M).* Thus for a shaftsubjected to combined bending and torsion, the equivalent twisting moment,

$$T_e = \sqrt{(K_m \times M)^2 + (K_t + T)^2}$$

and equivalent bending moment,

$$M_e = \frac{1}{2}\left[K_m \times M + \sqrt{(K_m \times M)^2 + (K_t \times T)^2}\right]$$

where *Km = Combined shock and fatigue factor for bending, and*
Kt = Combined shock and fatigue factor for torsion.

The following table shows the recommended values for *Km and Kt.*

Table 14.2. Recommended values for K_m and K_t

Nature of load	K_m	K_t
1. Stationary shafts		
(*a*) Gradually applied load	1.0	1.0
(*b*) Suddenly applied load	1.5 to 2.0	1.5 to 2.0
2. Rotating shafts		
(*a*) Gradually applied or steady load	1.5	1.0
(*b*) Suddenly applied load with minor shocks only	1.5 to 2.0	1.5 to 2.0
(*c*) Suddenly applied load with heavy shocks	2.0 to 3.0	1.5 to 3.0

Example 14.12. *A mild steel shaft transmits 20 kW at 200 r.p.m. It carries a central load of 900 N and is simply supported between the bearings 2.5 metres apart. Determine the size of the shaft, if the allowable shear stress is 42 MPa and the maximum tensile or compressive stress is not to exceed 56 MPa. What size of the shaft will be required, if it is subjected to gradually applied loads?*

Solution. Given : $P = 20$ kW $= 20 \times 10^3$ W ; $N = 200$ r.p.m. ; $W = 900$ N ; $L = 2.5$ m ; $\tau = 42$ MPa $= 42$ N/mm^2 ; $\sigma_b = 56$ MPa $= 56$ N/mm^2

Size of the shaft

Let d = Diameter of the shaft, in mm.

We know that torque transmitted by the shaft,

$$T = \frac{P \times 60}{2\pi N} = \frac{20 \times 10^3 \times 60}{2\pi \times 200} = 955 \text{ N-m} = 955 \times 10^3 \text{ N-mm}$$

and maximum bending moment of a simply supported shaft carrying a central load,

$$M = \frac{W \times L}{4} = \frac{900 \times 2.5}{4} = 562.5 \text{ N-m} = 562.5 \times 10^3 \text{ N-mm}$$

We know that the equivalent twisting moment,

$$T_e = \sqrt{M^2 + T^2} = \sqrt{(562.5 \times 10^3)^2 + (955 \times 10^3)^2}$$
$$= 1108 \times 10^3 \text{ N-mm}$$

We also know that equivalent twisting moment (T_e),

$$1108 \times 10^3 = \frac{\pi}{16} \times \tau \times d^3 = \frac{\pi}{16} \times 42 \times d^3 = 8.25\ d^3$$

$$\therefore \quad d^3 = 1108 \times 10^3 / 8.25 = 134.3 \times 10^3 \text{ or } d = 51.2 \text{ mm}$$

We know that the equivalent bending moment,

$$M_e = \frac{1}{2}\left[M + \sqrt{M^2 + T^2}\right] = \frac{1}{2}(M + T_e)$$

$$= \frac{1}{2}(562.5 \times 10^3 + 1108 \times 10^3) = 835.25 \times 10^3 \text{ N-mm}$$

We also know that equivalent bending moment (M_e),

$$835.25 \times 10^3 = \frac{\pi}{32} \times \sigma_b \times d^3 = \frac{\pi}{32} \times 56 \times d^3 = 5.5\, d^3$$

$\therefore$ $$d^3 = 835.25 \times 10^3 / 5.5 = 152 \times 10^3 \text{ or } d = 53.4 \text{ mm}$$

Taking the larger of the two values, we have

$$d = 53.4 \text{ say } 55 \text{ mm}$$ Ans.

Size of the shaft when subjected to gradually applied load

Let d = Diameter of the shaft.

From Table 14.2, for rotating shafts with gradually applied loads,

$$K_m = 1.5 \text{ and } K_t = 1$$

We know that equivalent twisting moment,

$$T_e = \sqrt{(K_m \times M)^2 + (K_t \times T)^2}$$

$$= \sqrt{(1.5 \times 562.5 \times 10^3)^2 + (1 \times 955 \times 10^3)^2} = 1274 \times 10^3 \text{ N-mm}$$

We also know that equivalent twisting moment (T_e),

$$1274 \times 10^3 = \frac{\pi}{16} \times \tau \times d^3 = \frac{\pi}{16} \times 42 \times d^3 = 8.25\, d^3$$

$$\therefore \quad d^3 = 1274 \times 10^3 / 8.25 = 154.6 \times 10^3 \text{ or } d = 53.6 \text{ mm}$$

We know that the equivalent bending moment,

$$M_e = \tfrac{1}{2}\left[K_m \times M + \sqrt{(K_m \times M)^2 + (K_t \times T)^2}\right] = \tfrac{1}{2}\left[K_m \times M + T_e\right]$$

$$= \tfrac{1}{2}\left[1.5 \times 562.5 \times 10^3 + 1274 \times 10^3\right] = 1059 \times 10^3 \text{ N-mm}$$

We also know that equivalent bending moment (M_e),

$$1059 \times 10^3 = \frac{\pi}{32} \times \sigma_b \times d^3 = \frac{\pi}{32} \times 56 \times d^3 = 5.5\, d^3$$

$$\therefore \quad d^3 = 1059 \times 10^3 / 5.5 = 192.5 \times 10^3 = 57.7 \text{ mm}$$

Taking the larger of the two values, we have

$$d = 57.7 \text{ say } 60 \text{ mm}$$ **Ans.**

Example 14.13. *Design a shaft to transmit power from an electric motor to a lathe head stock through a pulley by means of a belt drive. The pulley weighs 200 N and is located at 300 mm from the centre of the bearing. The diameter of the pulley is 200 mm and the maximum power transmitted is 1 kW at 120 r.p.m. The angle of lap of the belt is 180° and coefficient of friction between the belt and the pulley is 0.3. The shock and fatigue factors for bending and twisting are 1.5 and 2.0 respectively. The allowable shear stress in the shaft may be taken as 35 MPa.*

Solution. Given : $W = 200$ N ; $L = 300$ mm ; $D = 200$ mm or $R = 100$ mm ; $P = 1$ kW $= 1000$ W ; $N = 120$ r.p.m. ; $\theta = 180° = \pi$ rad ; $\mu = 0.3$; $K_m = 1.5$; $K_t = 2$; $\tau = 35$ MPa $= 35$ N/mm^2

The shaft with pulley is shown in Fig. 14.9.

We know that torque transmitted by the shaft,

$$T = \frac{P \times 60}{2\pi N} = \frac{1000 \times 60}{2\pi \times 120} = 79.6 \text{ N-m} = 79.6 \times 10^3 \text{ N-mm}$$

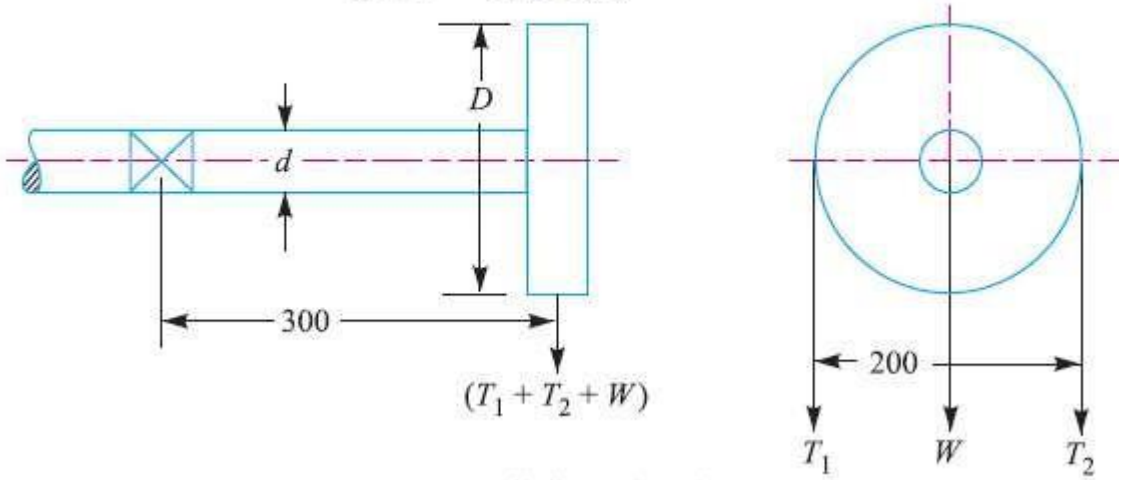

All dimensions in mm.

Let T_1 and T_2 = Tensions in the tight side and slack side of the belt respectively in newtons.

∴ Torque transmitted (T),

$$79.6 \times 10^3 = (T_1 - T_2)\, R = (T_1 - T_2)\, 100$$

∴ $$T_1 - T_2 = 79.6 \times 10^3 / 100 = 796 \text{ N} \quad \text{...(i)}$$

We know that

$$2.3 \log \left(\frac{T_1}{T_2}\right) = \mu.\theta = 0.3\, \pi = 0.9426$$

∴ $$\log \left(\frac{T_1}{T_2}\right) = \frac{0.9426}{2.3} = 0.4098 \text{ or } \frac{T_1}{T_2} = 2.57 \quad \text{...(ii)}$$

...(Taking antilog of 0.4098)

From equations (*i*) and (*ii*), we get,

$$T_1 = 1303 \text{ N, and } T_2 = 507 \text{ N}$$

We know that the total vertical load acting on the pulley,

$$W_T = T_1 + T_2 + W = 1303 + 507 + 200 = 2010 \text{ N}$$

∴ Bending moment acting on the shaft,

$$M = W_T \times L = 2010 \times 300 = 603 \times 10^3 \text{ N-mm}$$

Let d = Diameter of the shaft.

We know that equivalent twisting moment,

$$T_e = \sqrt{(K_m \times M)^2 + (K_t + T)^2}$$

$$= \sqrt{(1.5 \times 603 \times 10^3)^2 + (2 \times 79.6 \times 10^3)^2} = 918 \times 10^3 \text{ N-mm}$$

We also know that equivalent twisting moment (T_e),

$$918 \times 10^3 = \frac{\pi}{16} \times \tau \times d^3 = \frac{\pi}{16} \times 35 \times d^3 = 6.87\, d^3$$

∴ $$d^3 = 918 \times 10^3 / 6.87 = 133.6 \times 10^3 \text{ or } d = 51.1 \text{ say } 55 \text{ mm}$$ Ans.

Shafts Subjected to Axial Load in addition to Combined Torsion and Bending Loads

When the shaft is subjected to an axial load (F) in addition to torsion and bending loads as in propeller shafts of ships and shafts for driving worm gears, then the stress due to axial load must be added to the bending stress (σ_b). We know that bending equation is

$$\frac{M}{I} = \frac{\sigma_b}{y} \quad \text{or} \quad \sigma_b = \frac{M.y}{I} = \frac{M \times d/2}{\frac{\pi}{64} \times d^4} = \frac{32M}{\pi d^3}$$

and stress due to axial load

$$= \frac{F}{\frac{\pi}{4} \times d^2} = \frac{4F}{\pi d^2} \qquad \text{...(For round solid shaft)}$$

$$= \frac{F}{\frac{\pi}{4}\left[(d_o)^2 - (d_i)^2\right]} = \frac{4F}{\pi\left[(d_o)^2 - (d_i)^2\right]} \qquad \text{...(For hollow shaft)}$$

$$= \frac{F}{\pi\,(d_o)^2\,(1 - k^2)} \qquad \text{... } (\because k = d/d_o)$$

$\therefore$ Resultant stress (tensile or compressive) for solid shaft,

$$\sigma_1 = \frac{32M}{\pi d^3} + \frac{4F}{\pi d^2} = \frac{32}{\pi d^3}\left(M + \frac{F \times d}{8}\right) \qquad \text{...}(i)$$

$$= \frac{32M_1}{\pi d^3} \qquad \text{...}\left(\text{Substituting } M_1 = M + \frac{F \times d}{8}\right)$$

In case of a hollow shaft, the resultant stress,

$$\sigma_1 = \frac{32\,M}{\pi\,(d_o)^3\,(1-k^4)} + \frac{4\,F}{\pi\,(d_o)^2\,(1-k^2)}$$

$$= \frac{32}{\pi\,(d_o)^3\,(1-k^4)}\left[M + \frac{F\,d_o\,(1+k^2)}{8}\right] = \frac{32\,M_1}{\pi\,(d_o)^3\,(1-k^4)}$$

$$\ldots\left[\text{Substituting for hollow shaft, } M_1 = M + \frac{F\,d_o\,(1+k^2)}{8}\right]$$

In case of long shafts (slender shafts) subjected to compressive loads, a factor known as ***column factor*** (α) must be introduced to take the column effect into account.

$\therefore$ Stress due to the compressive load,

$$\sigma_c = \frac{\alpha \times 4\,F}{\pi\,d^2} \qquad \ldots(\text{For round solid shaft})$$

$$= \frac{\alpha \times 4F}{\pi (d_o)^2 \ (1 - k^2)}$$ ...(For hollow shaft)

The value of column factor (α) for compressive loads* may be obtained from the following relation :

$$\text{Column factor,} \quad \alpha = \frac{1}{1 - 0.0044 \ (L / K)}$$

This expression is used when the slenderness ratio (L / K) is less than 115. When the slenderness ratio (L / K) is more than 115, then the value of column factor may be obtained from the following relation :

$$^{**}\text{Column factor,} \quad \alpha = \frac{\sigma_y \ (L / K)^2}{C \pi^2 \ E}$$

where L = Length of shaft between the bearings,

K = Least radius of gyration,

σ_y = Compressive yield point stress of shaft material, and

C = Coefficient in Euler's formula depending upon the end conditions.

The following are the different values of C depending upon the end conditions.

C = 1, for hinged ends,

= 2.25, for fixed ends,

= 1.6, for ends that are partly restrained as in bearings.

Note: In general, for a hollow shaft subjected to fluctuating torsional and bending load, along with an axial load, the equations for equivalent twisting moment (T_e) and equivalent bending moment (M_e) may be written as

$$T_e = \sqrt{\left[K_m \times M + \frac{\alpha\, F\, d_o\, (1+k^2)}{8}\right]^2 + (K_t \times T)^2}$$

$$= \frac{\pi}{16} \times \tau\, (d_o)^3\, (1-k^4)$$

and

$$M_e = \frac{1}{2}\left[K_m \times M + \frac{\alpha F d_o\, (1+k^2)}{8} + \sqrt{\left\{K_m \times M + \frac{\alpha F d_o\, (1+k^2)}{8}\right\}^2 + (K_t \times T)^2}\right]$$

$$= \frac{\pi}{32} \times \sigma_b\, (d_o)^3\, (1-k^4)$$

It may be noted that for a solid shaft, $k = 0$ and $d_0 = d$. When the shaft carries no axial load, then $F = 0$ and when the shaft carries axial tensile load, then $\alpha = 1$.

Example 14.18. *A hollow shaft is subjected to a maximum torque of 1.5 kN-m and a maximum bending moment of 3 kN-m. It is subjected, at the same time, to an axial load of 10 kN. Assume that the load is applied gradually and the ratio of the inner diameter to the outer diameter is 0.5. If the outer diameter of the shaft is 80 mm, find the shear stress induced in the shaft.*

Solution. Given : $T = 1.5$ kN-m $= 1.5 \times 10^3$ N-m ; $M = 3$ kN-m $= 3 \times 10^3$ N-m ; $F = 10$ kN $= 10 \times 10^3$ N ; $k = d_i / d_o = 0.5$; $d_o = 80$ mm $= 0.08$ m

Let τ = Shear stress induced in the shaft.

Since the load is applied gradually, therefore from Table 14.2, we find that

$$K_m = 1.5 \text{ ; and } K_t = 1.0$$

We know that the equivalent twisting moment for a hollow shaft,

$$T_e = \sqrt{\left[K_m \times M + \frac{\alpha F d_o (1 + k^2)}{8}\right]^2 + (K_t \times T)^2}$$

$$= \sqrt{\left[1.5 \times 3 \times 10^3 + \frac{1 \times 10 \times 10^3 \times 0.08 (1 + 0.5^2)}{8}\right]^2 + (1 \times 1.5 \times 10^3)^2}$$

... ($\because \alpha = 1$, for axial tensile loading)

$$= \sqrt{(4500 + 125)^2 + (1500)^2} = 4862 \text{ N-m} = 4862 \times 10^3 \text{ N-mm}$$

We also know that the equivalent twisting moment for a hollow shaft (T_e),

$$4862 \times 10^3 = \frac{\pi}{16} \times \tau (d_o)^3 (1 - k^4) = \frac{\pi}{16} \times \tau (80)^3 (1 - 0.5^4) = 94\,260\ \tau$$

$\therefore \quad \tau = 4862 \times 10^3 / 94\,260 = 51.6$ N/mm^2 = 51.6 MPa **Ans.**

Example 14.19. *A hollow shaft of 0.5 m outside diameter and 0.3 m inside diameter is used to drive a propeller of a marine vessel. The shaft is mounted on bearings 6 metre apart and it transmits 5600 kW at 150 r.p.m. The maximum axial propeller thrust is 500 kN and the shaft weighs 70 kN. Determine :*

1. *The maximum shear stress developed in the shaft, and*
2. *The angular twist between the bearings.*

Solution. Given : $d_o = 0.5$ m ; $d_i = 0.3$ m ; $P = 5600$ kW $= 5600 \times 10^3$ W ; $L = 6$ m ; $N = 150$ r.p.m. ; $F = 500$ kN $= 500 \times 10^3$ N ; $W = 70$ kN $= 70 \times 10^3$ N

1. *Maximum shear stress developed in the shaft*

Let τ = Maximum shear stress developed in the shaft.

We know that the torque transmitted by the shaft,

$$T = \frac{P \times 60}{2\pi N} = \frac{5600 \times 10^3 \times 60}{2\pi \times 150} = 356\ 460 \text{ N-m}$$

and the maximum bending moment,

$$M = \frac{W \times L}{8} = \frac{70 \times 10^3 \times 6}{8} = 52\ 500 \text{ N-m}$$

Now let us find out the column factor α. We know that least radius of gyration,

$$K = \sqrt{\frac{I}{A}} = \sqrt{\frac{\frac{\pi}{64}\left[(d_o)^4 - (d_i)^4\right]}{\frac{\pi}{4}\left[(d_o)^2 - (d_i)^2\right]}}$$

$$= \sqrt{\frac{[(d_o)^2 + (d_i)^2]\,[(d_o)^2 - (d_i)^2]}{16\,[(d_o)^2 - (d_i)^2]}}$$

$$= \frac{1}{4}\sqrt{(d_o)^2 + (d_i)^2} = \frac{1}{4}\sqrt{(0.5)^2 + (0.3)^2} = 0.1458 \text{ m}$$

∴ Slenderness ratio,

$$L / K = 6 / 0.1458 = 41.15$$

and column factor,

$$\alpha = \frac{1}{1 - 0.0044\left(\frac{L}{K}\right)} \qquad \ldots\left(\because \frac{L}{K} < 115\right)$$

$$= \frac{1}{1 - 0.0044 \times 41.15} = \frac{1}{1 - 0.18} = 1.22$$

Assuming that the load is applied gradually, therefore from Table 14.2, we find that

$$K_m = 1.5 \text{ and } K_t = 1.0$$

Also $$k = d_i / d_o = 0.3 / 0.5 = 0.6$$

We know that the equivalent twisting moment for a hollow shaft,

$$T_e = \sqrt{\left[K_m \times M + \frac{\alpha F d_o (1 + k^2)}{8}\right]^2 + (K_t \times T)^2}$$

$$= \sqrt{\left[1.5 \times 52\,500 + \frac{1.22 \times 500 \times 10^3 \times 0.5 (1 + 0.6^2)}{8}\right]^2 + (1 \times 356\,460)^2}$$

$$= \sqrt{(78\,750 + 51\,850)^2 + (356\,460)^2} = 380 \times 10^3 \text{ N-m}$$

We also know that the equivalent twisting moment for a hollow shaft (T_e),

$$380 \times 10^3 = \frac{\pi}{16} \times \tau (d_o)^3 (1 - k^4) = \frac{\pi}{16} \times \tau (0.5)^3 [1 - (0.6)^4] = 0.02\,\tau$$

$\therefore$ $$\tau = 380 \times 10^3 / 0.02 = 19 \times 10^6 \text{ N/m}^2 = 19 \text{ MPa}$$ Ans.

2. *Angular twist between the bearings*

Let θ = Angular twist between the bearings in radians.

We know that the polar moment of inertia for a hollow shaft,

$$J = \frac{\pi}{32}[(d_o)^4 - (d_i)^4] = \frac{\pi}{32}[(0.5)^4 - (0.3)^4] = 0.005\ 34\ \text{m}^4$$

From the torsion equation,

$$\frac{T}{J} = \frac{G \times \theta}{L}, \text{ we have}$$

$$\theta = \frac{T \times L}{G \times J} = \frac{356\ 460 \times 6}{84 \times 10^9 \times 0.00\ 534} = 0.0048 \text{ rad}$$

... (Taking $G = 84$ GPa $= 84 \times 10^9$ N/m^2)

$$= 0.0048 \times \frac{180}{\pi} = 0.275° \text{ Ans.}$$

Design of Shafts on the basis of Rigidity

1. *Torsional rigidity.* The torsional rigidity is important in the case of camshaft of an I.C. engine where the timing of the valves would be effected. The permissible amount of twist should not exceed 0.25° per metre length of such shafts. For line shafts or transmission shafts, deflections 2.5 to 3 degree per metre length may be used as limiting value. The widely used deflection for the shafts is limited to 1 degree in a length equal to twenty times the diameter of the shaft.

The torsional deflection may be obtained by using the torsion equation,

$$\frac{T}{J} = \frac{G.\theta}{L} \quad \text{or} \quad \theta = \frac{T.L}{J.G}$$

where θ = Torsional deflection or angle of twist in radians,

T = Twisting moment or torque on the shaft,

J = Polar moment of inertia of the cross-sectional area about the axis of rotation,

$$= \frac{\pi}{32} \times d^4 \quad \text{...(For solid shaft)}$$

$$= \frac{\pi}{32}\left[(d_o)^4 - (d_i)^4\right] \quad \text{...(For hollow shaft)}$$

G = Modulus of rigidity for the shaft material, and

L = Length of the shaft.

2. *Lateral rigidity.* It is important in case of transmission shafting and shafts running at high speed, where small lateral deflection would cause huge out-of-balance forces. The lateral rigidity is also important for maintaining proper bearing clearances and for correct gear teeth alignment. If the shaft is of uniform cross-section, then the lateral deflection of a shaft may be obtained by using the the lateral deflection may be determined from the fundamental equation for the elastic curve of a beam, *i.e.*

$$\frac{d^2 y}{dx^2} = \frac{M}{EI}$$

Example 14.21. *A steel spindle transmits 4 kW at 800 r.p.m. The angular deflection should not exceed 0.25° per metre of the spindle. If the modulus of rigidity for the material of the spindle is 84 GPa, find the diameter of the spindle and the shear stress induced in the spindle.*

Solution. Given : $P = 4$ kW $= 4000$ W ; $N = 800$ r.p.m. ; $\theta = 0.25° = 0.25 \times \frac{\pi}{180} = 0.0044$ rad ;
$L = 1$ m $= 1000$ mm ; $G = 84$ GPa $= 84 \times 10^9$ N/m^2 $= 84 \times 10^3$ N/mm^2

Diameter of the spindle

Let d = Diameter of the spindle in mm.

We know that the torque transmitted by the spindle,

$$T = \frac{P \times 60}{2\pi N} = \frac{4000 \times 60}{2\pi \times 800} = 47.74 \text{ N-m} = 47\,740 \text{ N-mm}$$

We also know that $\frac{T}{J} = \frac{G \times \theta}{L}$ or $J = \frac{T \times l}{G \times \theta}$

or $$\frac{\pi}{32} \times d^4 = \frac{47\,740 \times 1000}{84 \times 10^3 \times 0.0044} = 129\,167$$

$\therefore$ $d^4 = 129\,167 \times 32 / \pi = 1.3 \times 10^6$ or $d = 33.87$ say 35 mm **Ans.**

Shear stress induced in the spindle

Let τ = Shear stress induced in the spindle.

We know that the torque transmitted by the spindle (T),

$$47\,740 = \frac{\pi}{16} \times \tau \times d^3 = \frac{\pi}{16} \times \tau\,(35)^3 = 8420\,\tau$$

$\therefore$ $\tau = 47\,740 / 8420 = 5.67$ N/mm^2 $= 5.67$ MPa **Ans.**

Example 14.22. *Compare the weight, strength and stiffness of a hollow shaft of the same external diameter as that of solid shaft. The inside diameter of the hollow shaft being half the external diameter. Both the shafts have the same material and length.*

Solution. Given : $d_o = d$; $d_i = d_o / 2$ or $k = d_i / d_o = 1 / 2 = 0.5$

Comparison of weight

We know that weight of a hollow shaft,

$$W_H = \text{Cross-sectional area} \times \text{Length} \times \text{Density}$$

$$= \frac{\pi}{4}\left[(d_o)^2 - (d_i)^2\right] \times \text{Length} \times \text{Density} \qquad \ldots(i)$$

and weight of the solid shaft,

$$W_S = \frac{\pi}{4} \times d^2 \times \text{Length} \times \text{Density} \qquad \ldots(ii)$$

Since both the shafts have the same material and length, therefore by dividing equation (*i*) by equation (*ii*), we get

$$\frac{W_H}{W_S} = \frac{(d_o)^2 - (d_i)^2}{d^2} = \frac{(d_o)^2 - (d_i)^2}{(d_o)^2} \qquad \ldots(\because d = d_o)$$

$$= 1 - \frac{(d_i)^2}{(d_o)_2} = 1 - k^2 = 1 - (0.5)^2 = 0.75 \text{ Ans.}$$

Comparison of strength

We know that strength of the hollow shaft,

$$T_H = \frac{\pi}{16} \times \tau \, (d_o)^3 \, (1 - k^4) \qquad \ldots(iii)$$

and strength of the solid shaft,

$$T_S = \frac{\pi}{16} \times \tau \times d^3 \qquad \ldots(iv)$$

Dividing equation (*iii*) by equation (*iv*), we get

$$\frac{T_H}{T_S} = \frac{(d_o)^3 \, (1 - k^4)}{d^3} = \frac{(d_o)^3 \, (1 - k^4)}{(d_o)^3} = 1 - k^4 \qquad \ldots(\because d = d_o)$$

$$= 1 - (0.5)^4 = 0.9375 \text{ Ans.}$$

Comparison of stiffness

We know that stiffness

$$= \frac{T}{\theta} = \frac{G \times J}{L}$$

∴ Stiffness of a hollow shaft,

$$S_H = \frac{G}{L} \times \frac{\pi}{32} \left[(d_o)^4 - (d_i)^4 \right] \qquad \ldots(v)$$

and stiffness of a solid shaft,

$$S_S = \frac{G}{L} \times \frac{\pi}{32} \times d^4 \qquad \ldots(vi)$$

Dividing equation (*v*) by equation (*vi*), we get

$$\frac{S_H}{S_S} = \frac{(d_o)^4 - (d_i)^4}{d^4} = \frac{(d_o)^4 - (d_i)^4}{(d_o)^4} = 1 - \frac{(d_i)^4}{(d_o)^4} \qquad \ldots(\because d = d_o)$$

$$= 1 - k^4 = 1 - (0.5)^4 = 0.9375 \text{ Ans.}$$

EXERCISES

1. A shaft running at 400 r.p.m. transmits 10 kW. Assuming allowable shear stress in shaft as 40 MPa, find the diameter of the shaft. [Ans. 35 mm]

2. A hollow steel shaft transmits 600 kW at 500 r.p.m. The maximum shear stress is 62.4 MPa. Find the outside and inside diameter of the shaft, if the outer diameter is twice of inside diameter, assuming that the maximum torque is 20% greater than the mean torque. [Ans. 100 mm ; 50 mm]

3. A hollow shaft for a rotary compressor is to be designed to transmit a maximum torque of 4750 N-m. The shear stress in the shaft is limited to 50 MPa. Determine the inside and outside diameters of the shaft, if the ratio of the inside to the outside diameter is 0.4. [Ans. 35 mm ; 90 mm]

4. A motor car shaft consists of a steel tube 30 mm internal diameter and 4 mm thick. The engine develops 10 kW at 2000 r.p.m. Find the maximum shear stress in the tube when the power is transmitted through a 4 : 1 gearing. [Ans. 30 MPa]

5. A cylindrical shaft made of steel of yield strength 700 MPa is subjected to static loads consisting of a bending moment of 10 kN-m and a torsional moment of 30 kN-m. Determine the diameter of the shaft using two different theories of failure and assuming a factor of safety of 2. [Ans. 100 mm]

Combined bending and torsion loads on shaft: Shaft carrying gears.

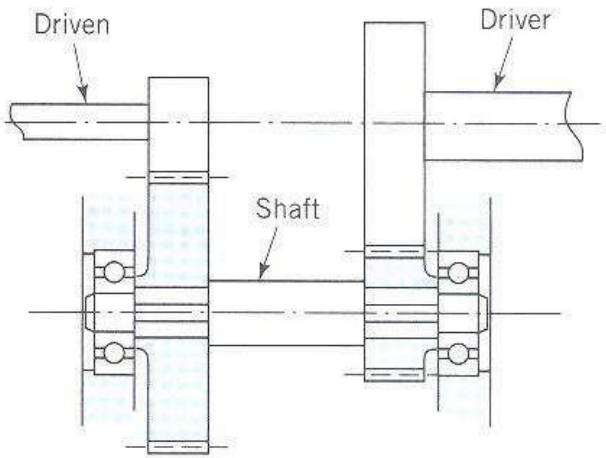

Gear countershaft

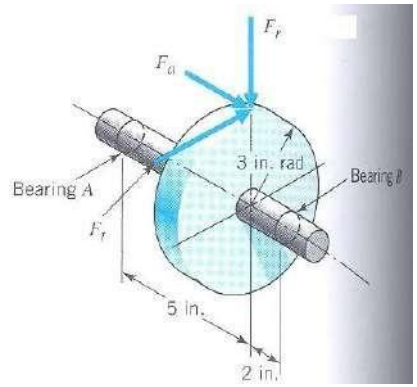

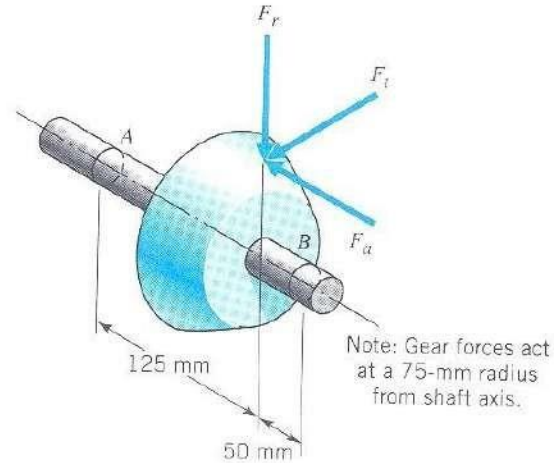

From power and rpm find the torque (T), which gives rise to shear stress.

From Torque (T) and diameter (d), find $F_t = 2T/d$. From F_t and pressure angles of gears you can find F_r and F_a.

F_r and F_t are orthogonal to each other and are both transverse forces to the shaft axis, which will give rise to normal bending stress in the shaft. When shaft rotates, bending stress changes from tensile to compressive and then compressive to tensile, ie, completely reversing state of stress.

F_a will give rise to normal axial stress in the shaft.

Loads on shaft due to pulleys

Pulley torque (T) = Difference in belt tensions in the tight (t_1) and slack (t_2) sides of a pulley times the radius (r), ie

$T = (t_1 - t_2) x r$

Left pulley torque

$T_1 = (7200-2700)x380=1,710,000$ N-mm

Right pulley has exactly equal and opposite torque:

$T_2 = (6750-2250)x380=1,710,000$ N-mm

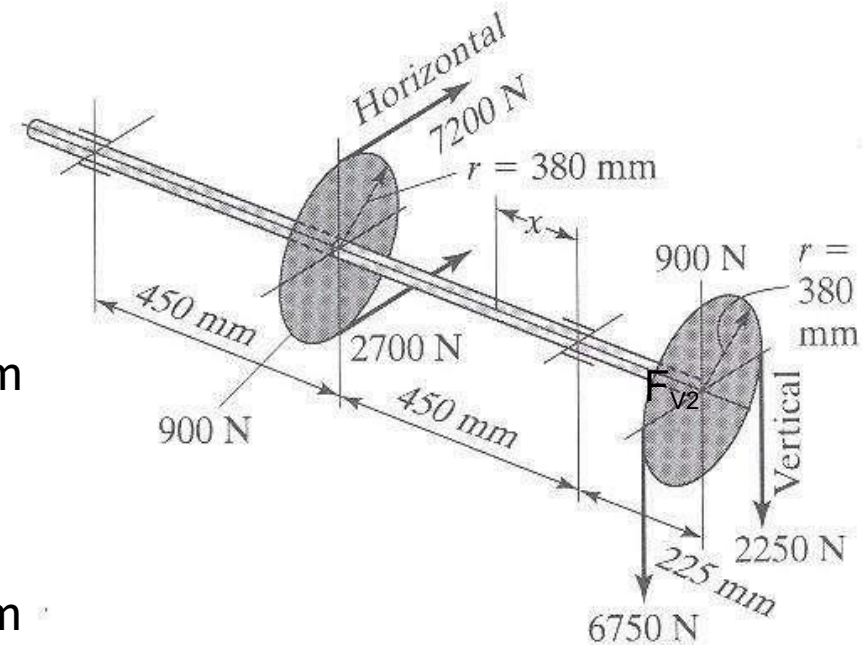

Bending forces in vertical (F_v) and horizontal (F_H) directions:

At the left pulley: F_{V1}=900N; F_{H1}=7200+2700 = 9900N

At the right pulley: F_{V2}=900+6750+2250=9900N; F_{H2}=0

Power, Toque & Speed

For linear motion:

Power = F.v (force x velocity)

For rotational motion

Power P = Torque x angular velocity

= T (in-lb).ω (rad/sec) in-lb/sec

= T.(2π n/60) in-lb/sec [n=rpm]

= T.(2π n/(60*12*550)) HP [HP=550 ft-lb/sec]

= T.n/63,025 HP

or, T= 63,025HP/n (in-lb), where n = rpm

Similarly, T= 9,550,000kW/n (N-mm), where n = rpm

Design of rotating shafts and fatigue consideration

The most frequently encountered stress situation for a rotating shaft is to have completely reversed bending and steady torsional stress. In other situations, a shaft may hav a reversed torsional stress along with reversed bending stress.

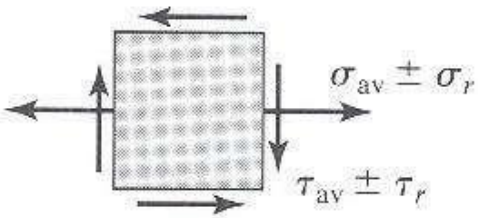

The most generalized situation the rotating shaft may have both steady and cyclic components of bending stress (σ_{av},σ_r) and torsional stress (τ_{av},τ_r).

From Soderberg's fatigue criterion, the equivalent static bending and torsional stresses are:

$$\sigma_{\text{equivalent}} = \sigma_{av} + \sigma_r K_{fb}\left(\frac{S_{yp}}{S_e}\right)$$

$$\tau_{\text{equivalent}} = \tau_{av} + \tau_r K_{ft}\left(\frac{S_{yp}}{S_e}\right)$$

Using these equivalent static stresses in our static de

$$\left(\sigma_{av} + \sigma_r K_{fb}\left(\frac{S_{yp}}{S_e}\right)\right)^2 + 3\left(\tau_{av} + \tau_r K_{ft}\left(\frac{S_{yp}}{S_e}\right)\right)^2 \leqq \left(\frac{S_{yp}}{N_{fs}}\right)^2$$

Integrated splines in hubs and shafts allow axial motion and transmits torque

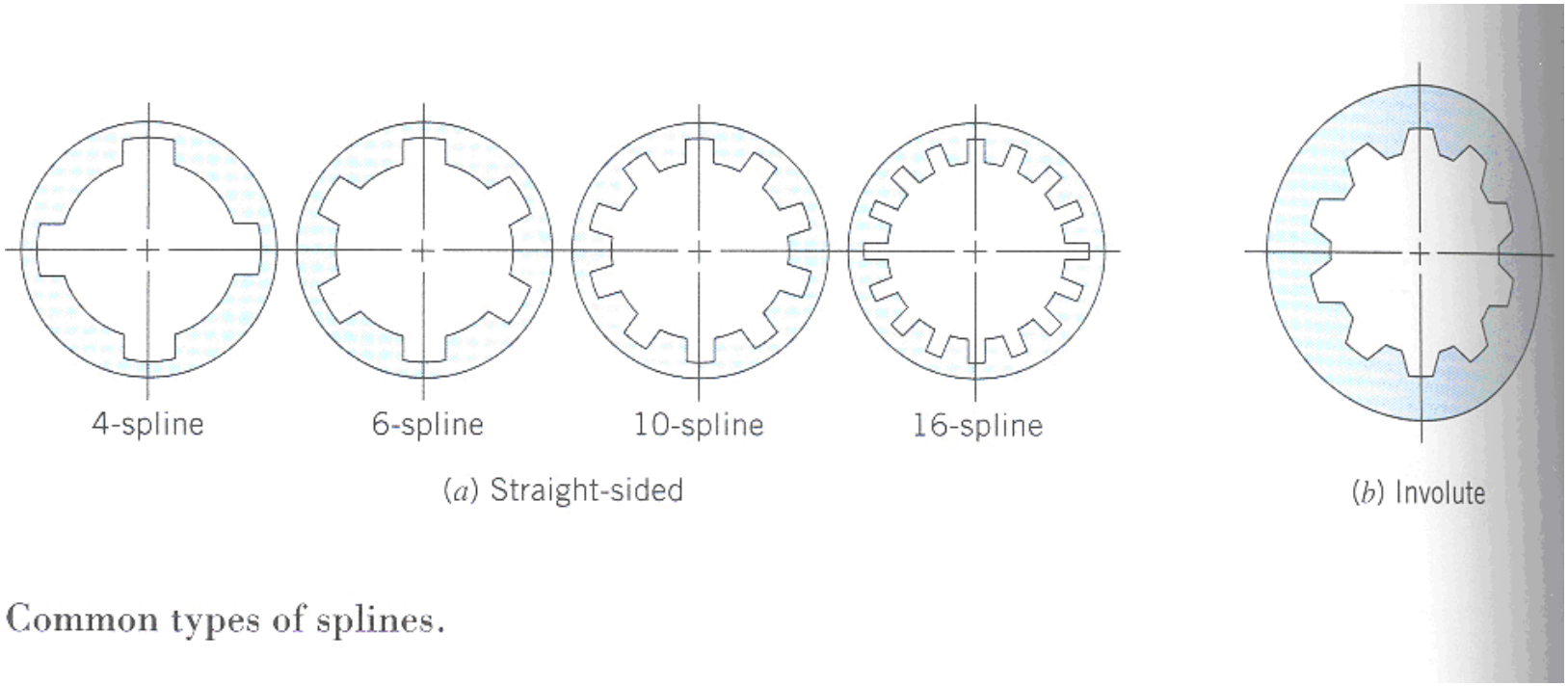

Common types of splines.

All keys, pins and splines give rise to stress concentration in the hub and shaft

- Shaft couplings are used in machinery for several purposes,
- 1. To provide for the connection of shafts of units that are manufactured separately such as a motor and generator and to provide for disconnection for repairs or alternations.
- 2. To provide for misalignment of the shafts or to introduce mechanical flexibility.
- 3. To reduce the transmission of shock loads from one shaft to another.
- 4. To introduce protection against overloads.
- 5 .It should have no projecting parts

- Requirements of a Good Shaft Coupling
- 1.It should be easy to connect or disconnect.
- 2. It should transmit the full power from one shaft to the other shaft without losses.
- 3.It should hold the shafts in perfect alignment.
- 4.It should reduce the transmission of shock loads from one shaft to another shaft.
- 5.If should have no projecting parts.

TYPES OF SHAFTS COUPLINGS

- 1. Rigid coupling 2. Flexible coupling

1. Rigid coupling : It is used to connect two shafts which are perfectly aligned.

- types of rigid coupling are
- a)Sleeve or muff coupling.
- b)Clamp or split-muff or compression coupling,
- c)Flange coupling

- 2.Flexible coupling : It is used to connect two shafts having both lateral and angular misalignment.

- Types of flexible coupling are

- a)Bushed pin type coupling,
- b)Universal coupling, and
- c)Oldham coupling

SLEEVE OR MUFF-COUPLING

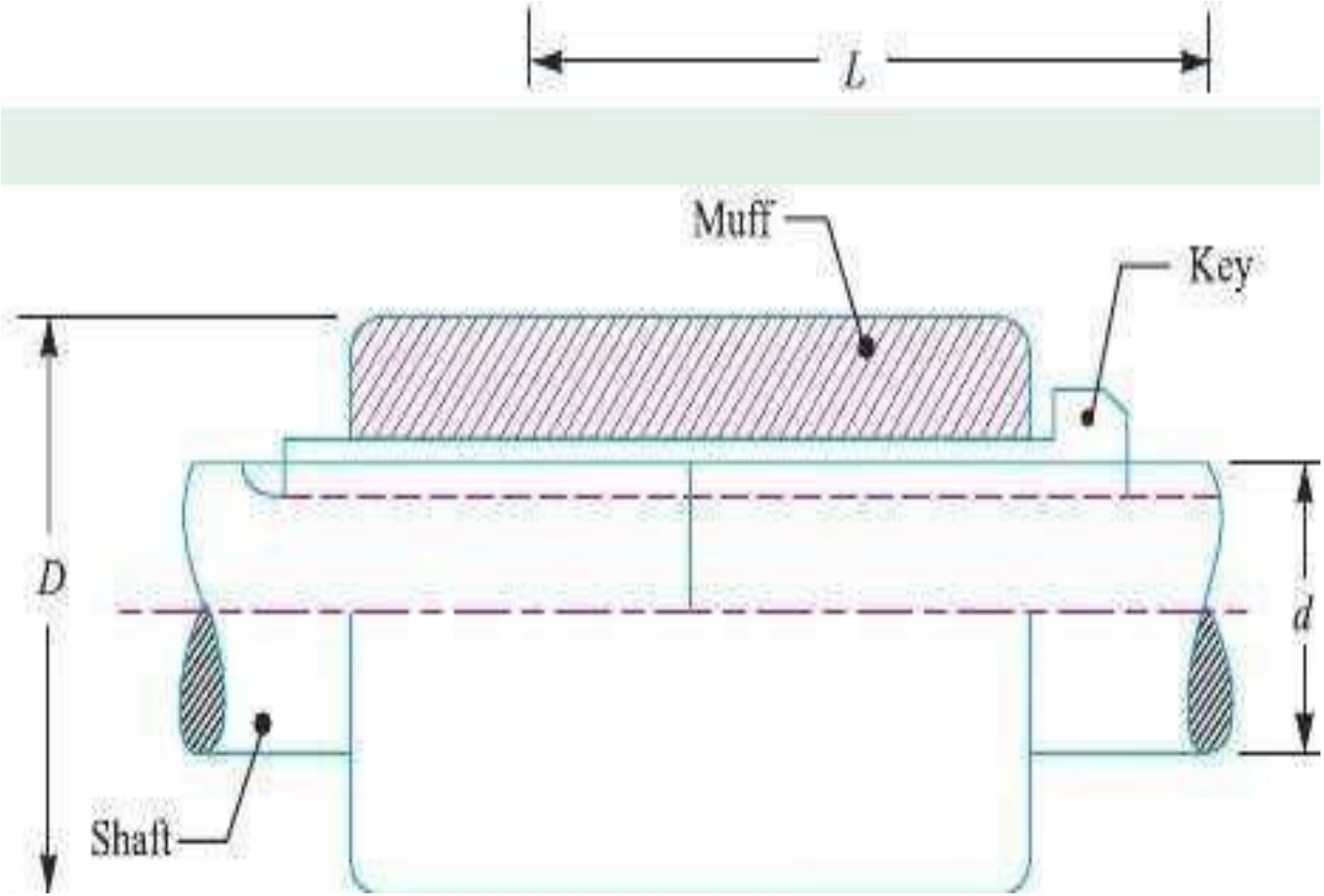

- It is the simplest type of rigid coupling, made of cast iron.
- It consists of a hollow cylinder whose inner diameter is the same as that of the shaft (sleeve).
- It is fitted over the ends of the two shafts by means of a gib head key, as shown in Fig.
- The power is transmitted from one shaft to the other shaft by means of a key and a sleeve.

- SHAFT - (d, T)

d = diameter of the shaft , T= torque

- SLEEVE – (D, L)

D= Outer diameter of the sleeve

- KEY- RED
- l= length, w= width, t=thickness

DESIGN FOR SLEEVE

- The usual proportions of a cast iron sleeve coupling
- Outer diameter of the sleeve, $D = 2d + 13$ mm

  length of the sleeve, $L = 3.5d$

  Where d = diameter of the shaft
- The sleeve is designed by considering it as a hollow shaft.

- T=Torque to be transmitted by the coupling
- τ_c=Permissible shear stress for the material of the sleeve which is cast rion.
- τ_c = 14 MPa.
- Torque transmitted by a hollow section

$$T = (\pi/16)\times\tau_c\times(D^4-d^4)/D$$

$$= (\pi/16)\times\tau_c\times D^3(1-K^4)$$

... ($\because k = d / D$)

- From this expression, the induced shear stress in the sleeve may be checked

Design for key

- The length of the coupling key = sleeve

  (i.e. . 3.5d).

- The coupling key is usually made into two parts
- length of the key in each shaft

  $l = L/2 = 3.5d/2$

- After fixing the length of key in each shaft, the induced shearing and crushing stresses may be checked. We know that torque transmitted,

- $T = l \times w \times \tau \times (d/2)$
  (Considering shearing of the key)

- $T = l \times t/2 \times \sigma_C \times (d/2)$
  (Considering crushing of the key

Clamp or Compression Coupling

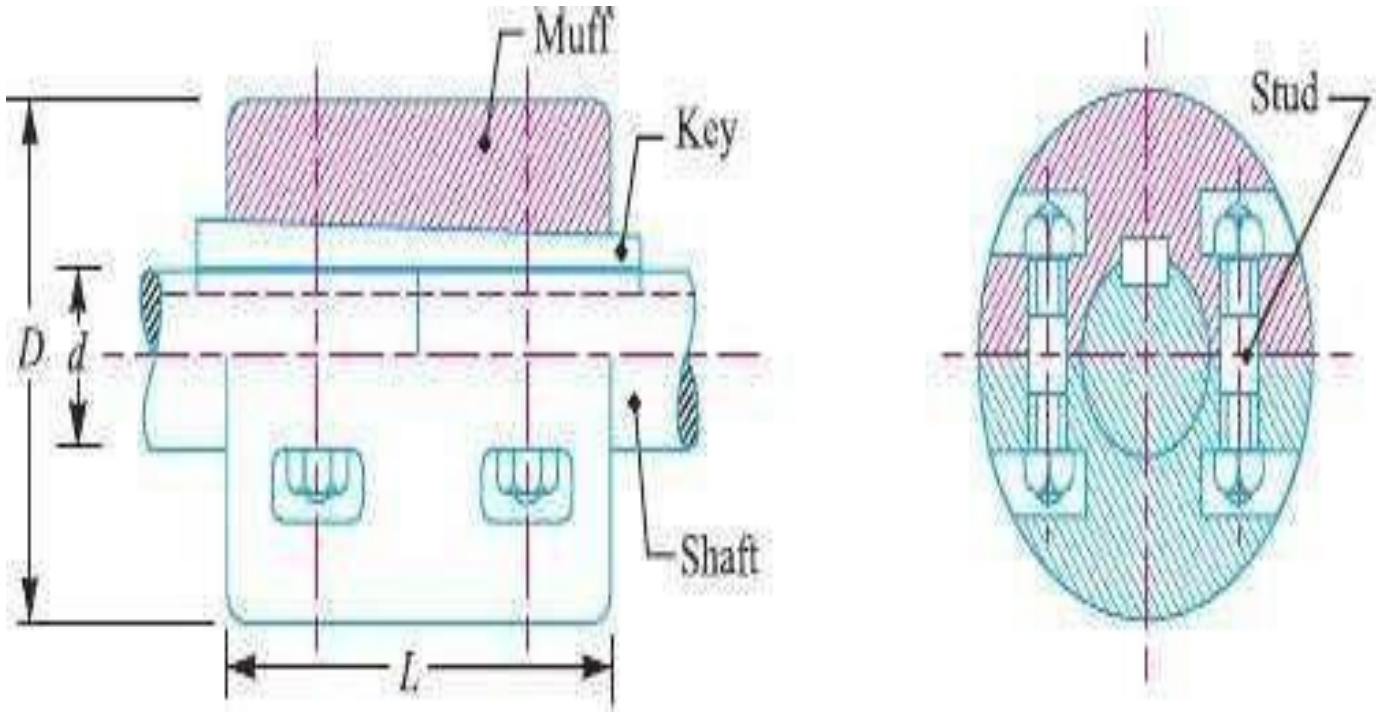

- the muff or sleeve is made into two halves and are bolted together.
- The halves of the muff are made of cast iron.
- The shaft ends are made to a butt each other
- a single key is fitted directly in the keyways of both the shafts.
- One-half of the muff is fixed from below and the other half is placed from above.
- Both the halves are held together by means of mild steel studs or bolts and nuts.
- The number of bolts may be two, four or six.
- The advantage of this coupling is that the position of the shafts need not be changed for assembling or disassembling of the couplings

1. Design of muff

- The usual proportions of a cast iron sleeve coupling
- Outer diameter of the sleeve, $D = 2d + 13$ mm
- length of the sleeve, $L = 3.5d$

  Where d = diameter of the shaft

- The sleeve is designed by considering it as a hollow shaft.

- **T**=Torque to be transmitted by the coupling
- τ_c=Permissible shear stress for the material of the sleeve which is cast iron.
- τ_c = **14 MPa.**
- Torque transmitted by a hollow section

$$T = (\pi/16)\times\tau_c\times(D^4-d^4)/D$$

$$= (\pi/16)\times\tau_c\times D^3(1-K^4)$$

$$\ldots (\because k = d / D)$$

- From this expression, the induced **shear stress in the sleeve** may be checked

2. Design for key

- The length of the coupling key = length of the sleeve **(i.e. . 3.5d).**
- The coupling key is usually made into two parts
- length of the key in each shaft

  l= L/2=3.5d/2
- After fixing the length of key in each shaft, the induced shearing and crushing stresses may be checked. We know that torque transmitted

- $T = l \times w \times \tau \times (d/2)$

  (Considering shearing of the key)

- $T = l \times t/2 \times \sigma_C \times (d/2)$

  (Considering crushing of the key

3. Design of clamping bolts

- T =Torque transmited by the shaft,
- d =Diameter of shaft,
- d_b=Root or effective diameter of bolt
- n=Number of bolts,
- σ_t =Permissible tensile stress for bolt material,
- μ=Coefficient of friction between the muff and shaft, and
- L=Length of muff.

- force exerted by each bolt **(F) =(π/4) (d $_b^2$) σ_t**

- Force exerted by the bolts on each side of the shaft **(F)= (π/4) (d $_b^2$) (σ_t)(n/2)**

- (P)be the pressure on the shaft and the muff surface due to the force, then for uniform pressure distribution over the surface

- P=Force/Projected area

- **P= (π/4) (d $_b^2$) (σ_t)(n/2)/(1/2)Ld**

- ∴Frictional force between each shaft and muff,

  $F = \mu \times$ pressure $\times$ area
- **$F = (\mu \times (\pi/4)(d_b/2)(\sigma_t)(n/2)/(1/2)Ld) \times \pi (1/2) d L$**
- **$F = \mu \times (\pi^2/8)(d_b/2)(\sigma_t)(n)$**

- Torque that can be transmitted by the coupling

  $T = F \times d/2$

$$T = \mu \times (\pi^2/8)(d_b^2)(\sigma_t)(n) \times d/2$$

- From this relation, the root diameter of the bolt **(d_b)** may be evaluated.

  $\mu = 0.3$

C. Flange coupling

- A flange coupling usually applies to a coupling having two separate cast iron flanges.
- Each flange is mounted on the shaft end and keyed to it.
- The faces are turned up at right angle to the axis of the shaft
- Flange coupling are
- 1.Unprotected type flange coupling
- 2. Protected type flange coupling
- 3. Marine type flange coupling

1.Unprotected type flange coupling

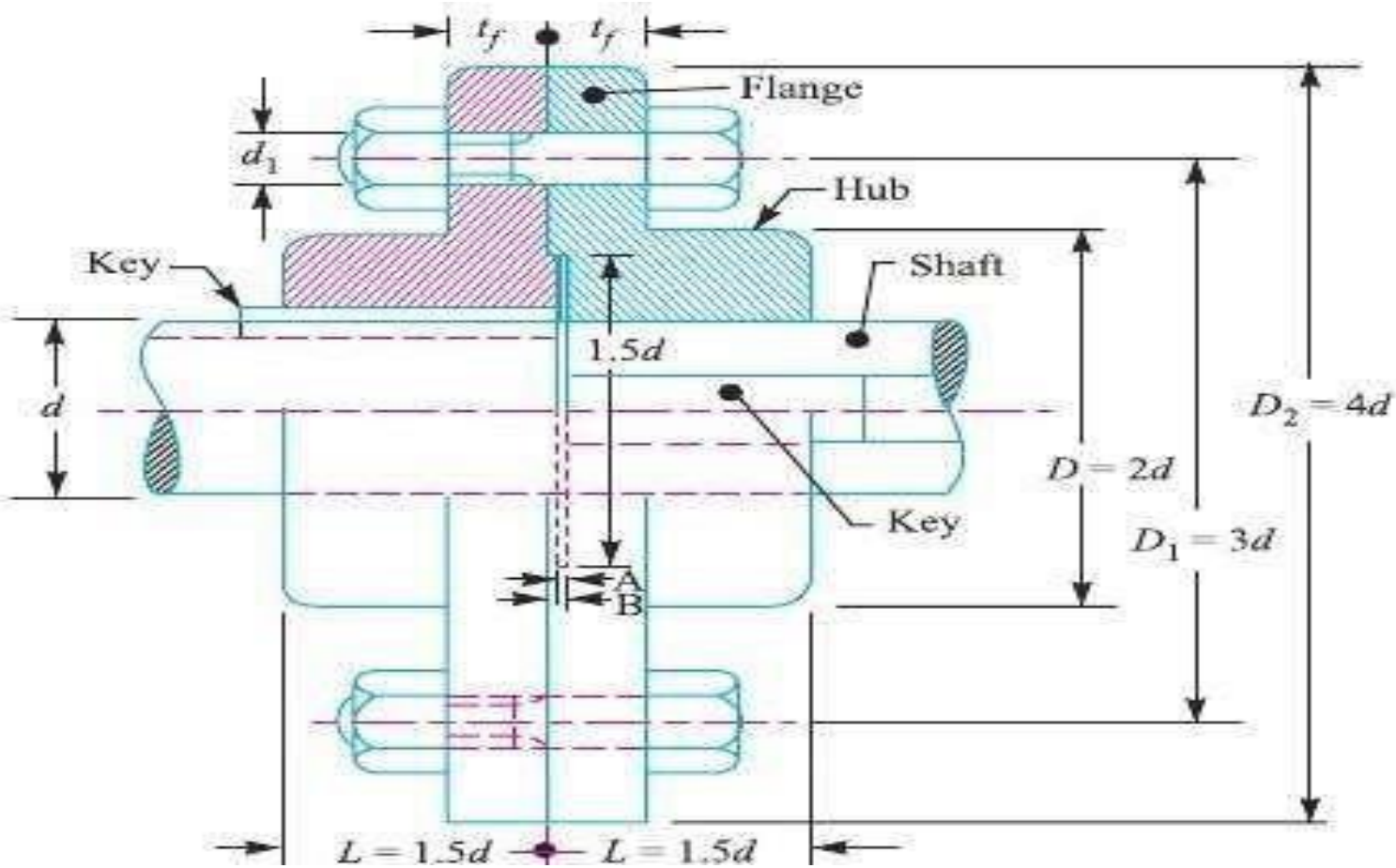

- In an unprotected type flange coupling each shaft is keyed to the boss of a flange with a counter sunk key and the flanges are coupled together by means of bolts.

- Generally, three, four or six bolts are used

Design of Unprotected type Flange Coupling

- The usual **proportions** for an unprotected type cast iron flange couplings
- d = diameter of the shaft or inner diameter of the hub
- D= Outside diameter of hub **D=2d**
- Length of hub, **L= 1.5d**
- Pitch circle diameter of bolts, $\mathbf{D_1=3d}$
- Outside diameter of flange,

$$D_2 = D_1 + (D_1 - D) = 2D_1 - D = 4d$$

- Thickness of flange $\mathbf{t_f = 0.5d}$
- **Number of bolts =3, ford upto 40 mm**
  =4, for d upto 100 mm
  =6, for d upto 180 mm

- d =Diameter of shaft or inner diameter of hub,
- τ_s =Allowable shear stress for shaft,
- D=Outer diameter of hub,
- t_f =Thickness of flange
- τ_c=Allowable shear stress for the flange material

- d_1=Nominal or outside diameter of bolt,
- D_1 =Diameter of bolt circle,
- n=Number of bolts,
- $\tau_{b=}$ Allowable shear stress for bolt
- $\sigma_{cb,,}$ =Allowable crushing stress forbolt

- $\tau_{k=}$ Allowable shear stress for key material
- $\sigma_{ck=}$ key material

1. Design for hub

- The hub is designed by considering it as a hollow shaft,
- transmitting the same torque (T) as that of a solid shaft

$$T = \mathbf{T = (\pi/16)\times\tau_c\times(D^4-d^4)/D}$$

The outer diameter of hub is usually taken as twice the diameter of shaft.

- The length of hub **(L) = 1.5d**

2. Design for key

The material of key is usually the same as that of shaft. The length of key is taken equal to the length of hub **l=L**

- **$T = l \times w \times \tau \times (d/2)$**

  (Considering shearing of the key)

- **$T = l \times t/2 \times \sigma_C \times (d/2)$**

  (Considering crushing of the key

3. Design for flange

- T =Circumference of hub × Thickness of flange × Shear stress of flange × Radius of hub

- $$T = \pi D \times t_f \times \tau_c \times D/2$$
  $$T = \pi \times t_f \times \tau_c \times D^2/2$$

The thickness of flange is usually taken as half the diameter of shaft

4. Design for bolts

- Load on each bolt (F)= $(\pi/4)\ (d_1/2)\ (\tau_b)$

- Total load on all the bolts (F) = $(\pi/4)\ (d_1/2)\ (\tau_b)(n)$

- The bolts are subjected to shear stress due to the torque transmitted

  $$(T)= (\pi/4)\ (d_1/2)\ (\tau_b)(n)\ (D_1/2)$$

From this equation, the diameter of bolt (d_1) may be obtained.

- We know that area resisting crushing of all the bolts = $\mathbf{n \times d_1 \times t_f}$

- crushing strength of all the bolts = $\mathbf{n \times d_1 \times t_f \times \sigma_{Cb}}$

  Torque = $\mathbf{n \times d_1 \times t_f \times \sigma_{Cb} \times (D_1/2)}$

- From this equation, the induced crushing stress in the bolts may be checked

Protected type flange coupling

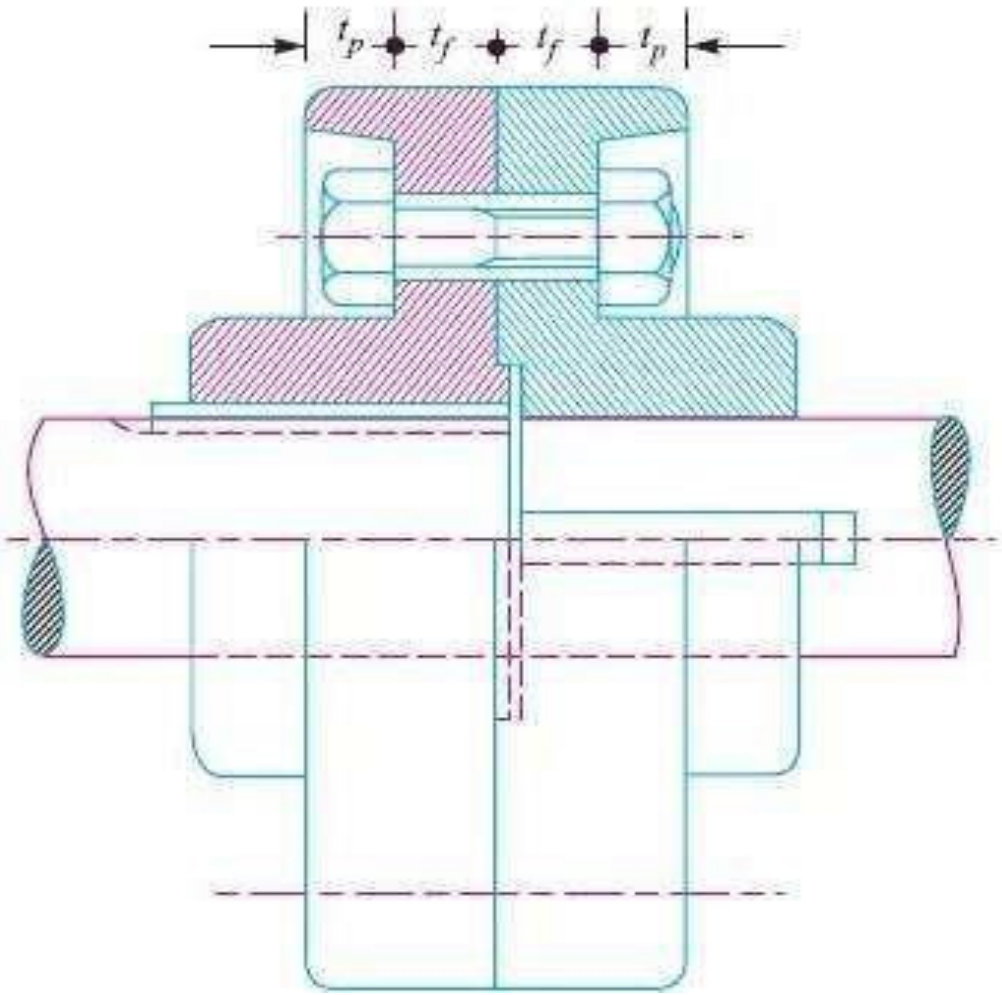

- the protruding bolts and nuts are protected by flanges on the two halves of the coupling, in order to avoid danger to the workman

$$(t_p) = 0.25d$$

The design of unprotective type is same process of protective type

Marine type flange coupling

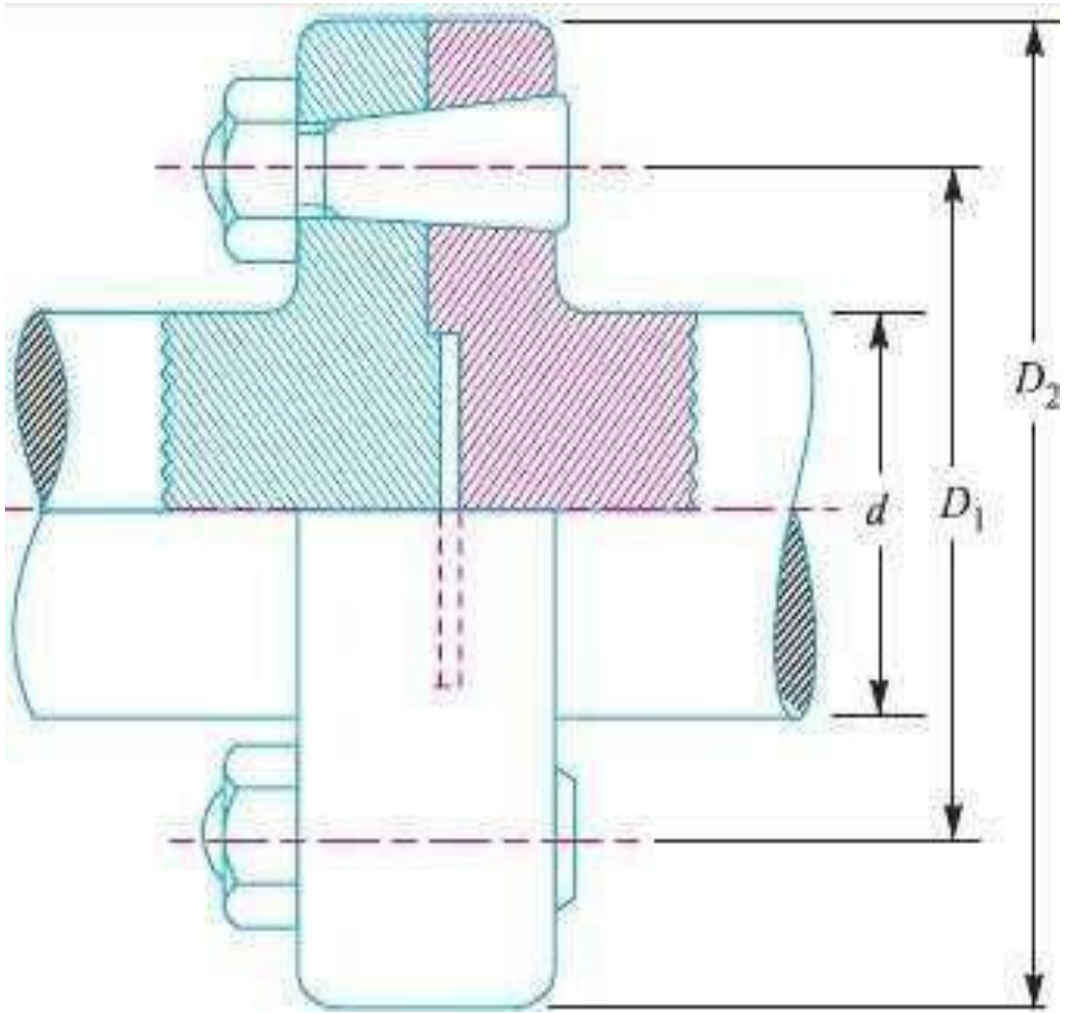

- In a marine type flange coupling, the flanges are forged integral with the shafts .
- The flanges are held together by means of tapered head less bolts.
- numbering from four to twelve depending upon the diameter of shaft.

Shaft diameter	No. of bolts
35 to 55	4
56 to 150	6
151 to 230	8
231 to 390	10
Above 390	12

- The other proportions for the marine type flange coupling
- Thickness of flange = d/ 3
- Taper of bolt= 1 in 20 to 1 in 40
- Pitch circle diameter of bolts, D_1= 1.6d
- Outside diameter of flange, D_2= 2.2d

Bushed-pin Flexible Coupling

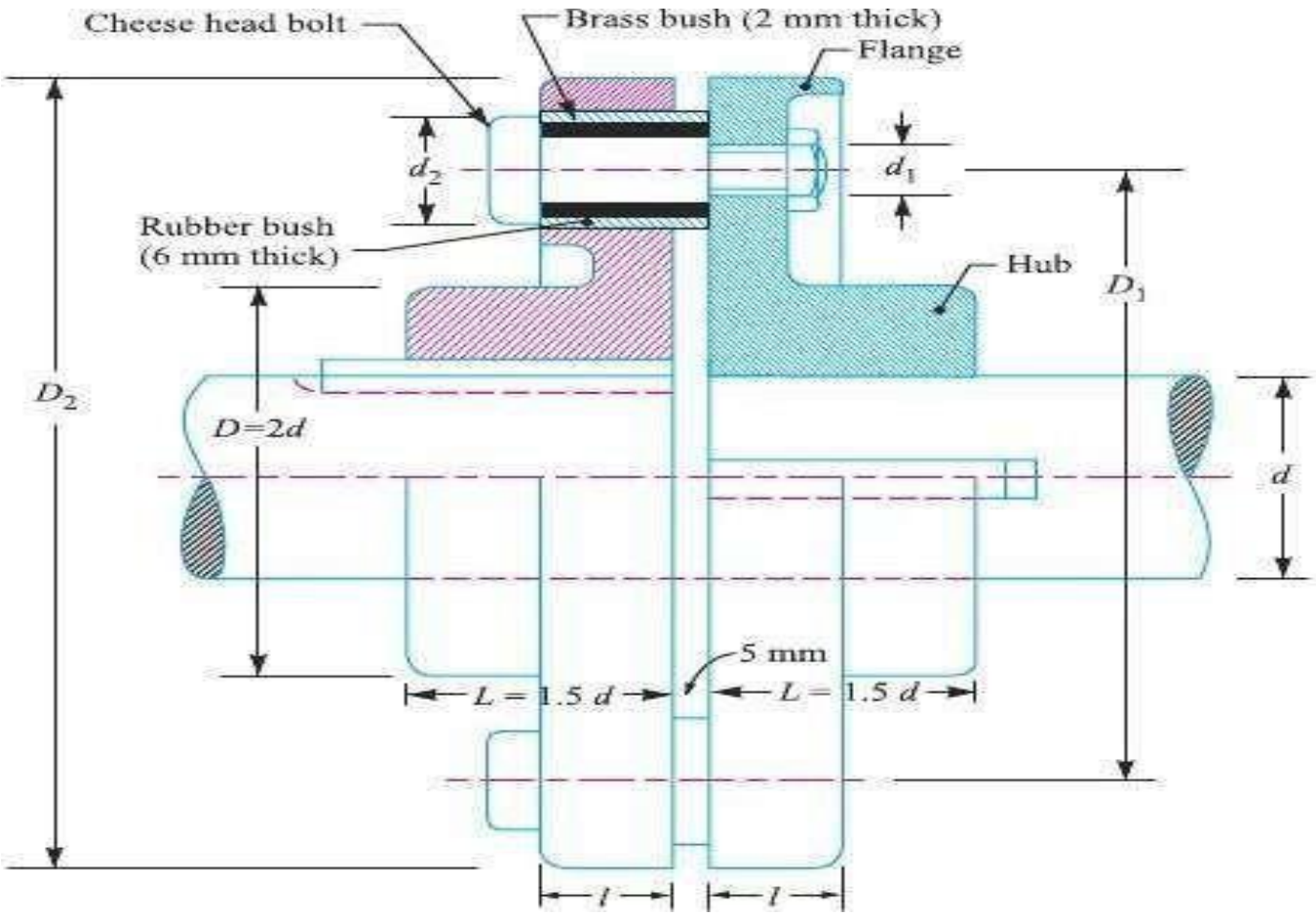

A modification of the rigid type of flange coupling.

- The coupling bolts are known as pins. The rubber or leather bushes are used over the pins.
- The two halves of the coupling are dissimilar in construction.
- A clearance of 5 mm is left between the face of the two halves of the coupling.

- the **proportions** of the rigid type flange coupling
- the bearing pressure on the rubber or leather bushes and it should not exceed 0.5 N/mm^2

Pin and bush design

- l=Length of bush in the flange,
- d_2=Diameter of bush,
- p_b=Bearing pressure on the bush or pin,
- n=Number of pins,
- D_1=Diameter of pitch circle of the pins

Pin and bush design

- Bearing load acting on each pin,
  $W = p_b \times d_2 \times l$

- ∴Total bearing load on the bush or pins,
- $W \times n = p_b \times d_2 \times l \times n$

- torque transmitted by the coupling,
- $T = W \times n \times (D_1/2)$

$$T = p_b \times d_2 \times l \times n \times (D_1/2)$$

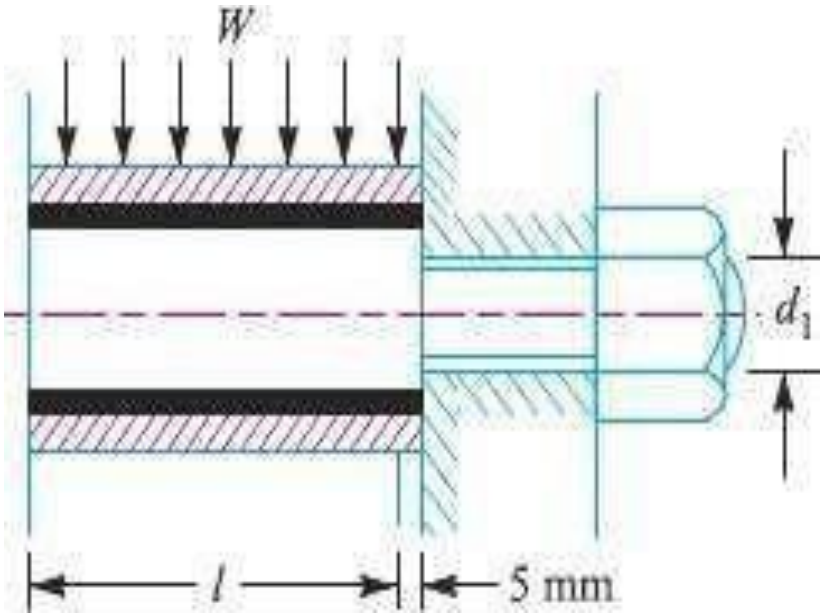
W
d_1
l
5 mm

- Direct shear stress due to pure torsion in the coupling halve
- $\tau = W/* \mathbf{(\pi/4)\ (d_1/2)]}$

- maximum bending moment on the pin
- $M = W\ (l/2 + 5mm)$
- bending stress

$$\sigma = M / Z$$

$$= W\ (l/2 + 5mm) / \mathbf{(\pi/32)\ (d_1^3)}$$

- Maximum principal stress, **$= 1/2*\sigma + (\sigma + 4\tau^2)^{1/2}]$**

- maximum shear stress on the pin, **$= 1/2(\sigma + 4\tau^2)^{1/2}$**

- The value of maximum principal stress varies from 28 to 42 MPa

UNIT-IV : DESIGN OF SPRINGS

Introduction to Design of Helical Springs

Objectives of Spring

Cushioning , absorbing , or controlling of energy due to shock and vibration.

Car springs or railway buffers To control energy, springs-supports and vibration dampers.

2. Control of motion

- Maintaining contact between two elements (cam and its follower)

  In a cam and a follower arrangement, widely used in numerous applications, a spring maintains contact between the two elements. It primarily controls the motion.

- Creation of the necessary pressure in a friction device (a brake or a clutch) A person driving a car uses a brake or a clutch for controlling the car motion. A spring system keep the brake in disengaged position until applied to stop the car. The clutch has also got a spring system (single springs or multiple springs) which engages and disengages the engine with the transmission system.
- Restoration of a machine part to its normal position when the applied force is withdrawn (a governor or valve)

  A typical example is a governor for turbine speed control. A governor system uses a spring controlled valve to regulate flow of fluid through the turbine, thereby controlling the turbine speed.

3. Measuring forces

Spring balances, gages

4.Storing of energy

In clocks or starters

The clock has spiral type of spring which is wound to coil and then the stored energy helps gradual recoil of the spring when in operation. Nowadays we do not find much use of the winding clocks.

Commonly used spring materials

- One of the important considerations in spring design is the choice of the spring material. Some of the common spring materials are
- *Hard-drawn wire:*

This is cold drawn, cheapest spring steel. Normally used for low stress and static load. The material is not suitable at subzero temperatures or at temperatures above 120ºC.

Oil-tempered wire:

It is a cold drawn, quenched, tempered, and general purpose spring steel. However, it is not suitable for fatigue or sudden loads, at subzero temperatures and at temperatures above 180ºC.

When we go for highly stressed conditions then alloy steels are useful.

Chrome Vanadium:

This alloy spring steel is used for high stress conditions and at high temperature up to 220ºC. It is good for fatigue resistance and long endurance for shock and impact loads.

Chrome Silicon:

This material can be used for highly stressed springs. It offers excellent service for long life, shock loading and for temperature up to 250ºC.

Music wire:

This spring material is most widely used for small springs. It is the toughest and has highest tensile strength and can withstand repeated loading at high stresses. However, it can not be used at subzero temperatures or at temperatures above 120ºC.

Normally when we talk about springs we will find that the music wire is a common choice for springs.

Stainless steel:

Widely used alloy spring materials.

Phosphor Bronze / Spring Brass:

It has good corrosion resistance and electrical conductivity. That's the reason it is commonly used for contacts in electrical switches. Spring brass can be used at subzero temperatures.

Helical compression spring

Belleville spring

Torsion spring

Flat spring

leaf spring

Helical extension spring

Torsion spring

Flat spring`

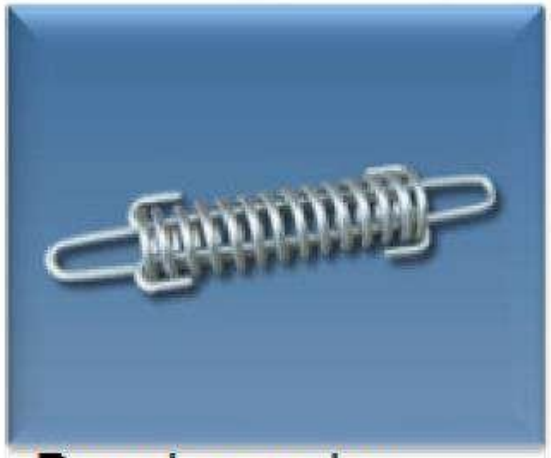

Draw bar spring

constant – force spring

Pull Types Springs

HELICAL SPRING

It is made of wire coiled in the form of helix having circular, square or rectangular cross section.

The figures below show the schematic representation of a helical spring acted upon by a tensile load F and compressive load F . The circles denote the cross section of the spring wire.

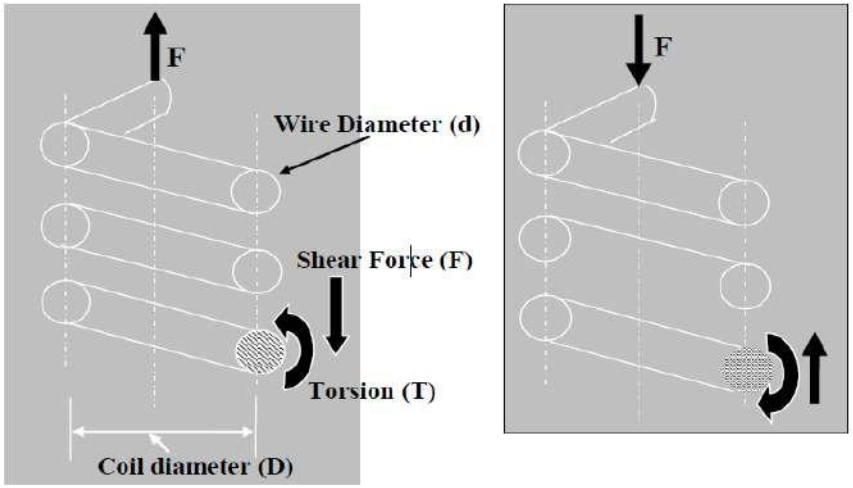

Terminology of helical spring

- They are as follows:

d = wire diameter of spring (mm)

Di = inside diameter of spring coil (mm)

Do =outside diameter of spring coil (mm)

D = mean coil diameter (mm)

There is an important parameter in spring design called spring index. It is denoted by letter C.

The spring index is defined as the ratio of mean coil diameter to wire diameter.

$C = D/d$

In design of helical springs, the designer should use good judgment in assuming the value of the spring index C. The spring index indicates the relative sharpness of the curvature of the coil.

A low spring index means high sharpness of curvature.
When the spring index is low ($C < 3$), the actual stresses in the wire are excessive due to curvature effect. Such a spring is difficult to manufacture and special care in coiling is required to avoid cracking in some wires. When the spring index is high ($C > 15$), it results in large variation in coil diameter.

Such a spring is prone to buckling and also tangles easily during handling. Spring index from 4 to 12 is considered better from manufacturing considerations.

Therefore, in practical applications, the spring index in the range of 6 to 9 is still preferred particularly for close tolerance springs and those subjected to cyclic loading.

Terms used in Helical springs

1. ***Solid length.*** When the compression spring is compressed until the coils come in contact with each other, then the spring is said to be ***solid.*** The solid length of a spring is the product of total number of coils and the diameter of the wire. Mathematically,

Solid length of the spring,

$$L_S = n'.d$$

where n' = Total number of coils, and

d = Diameter of the wire.

2. ***Free length.*** The free length of a compression spring, as shown in Fig. 23.6, is the length of the spring in the free or unloaded condition. It is equal to the solid length plus the maximum deflection or compression of the spring and the clearance between the adjacent coils (when fully compressed). Mathematically,

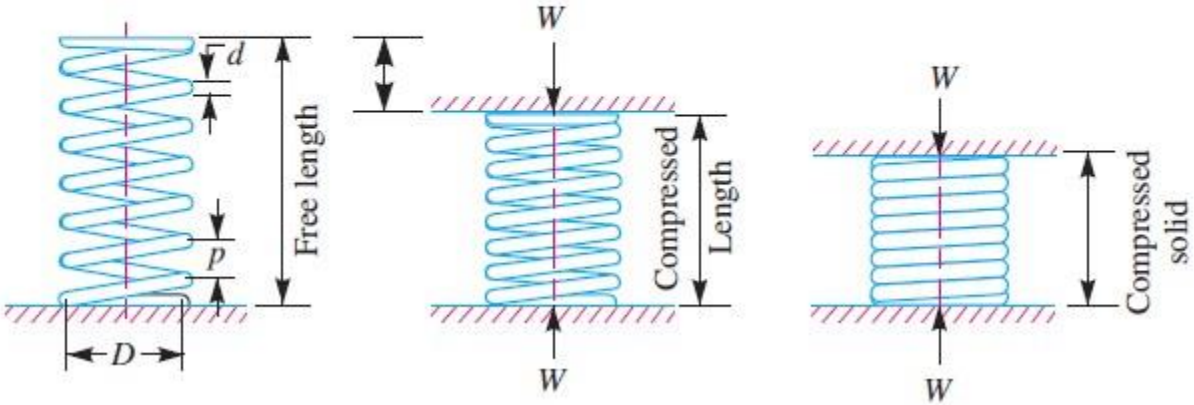

Free length of the spring,

$$L_F = \text{Solid length} + \text{Maximum compression} + {}^{*}\text{Clearance between adjacent coils (or clash allowance)}$$

$$= n'.d + \delta_{max} + 0.15\,\delta_{max}$$

The following relation may also be used to find the free length of the spring, *i.e.*

$$L_F = n'.d + \delta_{max} + (n' - 1) \times 1 \text{ mm}$$

In this expression, the clearance between the two adjacent coils is taken as 1 mm.

3. *Spring index.* The spring index is defined as the ratio of the mean diameter of the coil to the diameter of the wire. Mathematically,

Spring index, $C = D / d$

where D = Mean diameter of the coil, and

d = Diameter of the wire.

4. *Spring rate.* The spring rate (or stiffness or spring constant) is defined as the load required per unit deflection of the spring. Mathematically,

Spring rate, $k = W / \delta$

where W = Load, and

δ = Deflection of the spring.

5. *Pitch*. The pitch of the coil is defined as the axial distance between adjacent coils in uncompressed state. Mathematically,

Pitch of the coil, $$p = \frac{\text{Free length}}{n' - 1}$$

The pitch of the coil may also be obtained by using the following relation, *i.e.*

Pitch of the coil, $$p = \frac{L_F - L_S}{n'} + d$$

where L_F = Free length of the spring,

L_S = Solid length of the spring,

n' = Total number of coils, and

d = Diameter of the wire.

End conditions for helical compression springs

- The end condition are suitably formed to apply the loads on the springs.
- Various forms of end conditions are

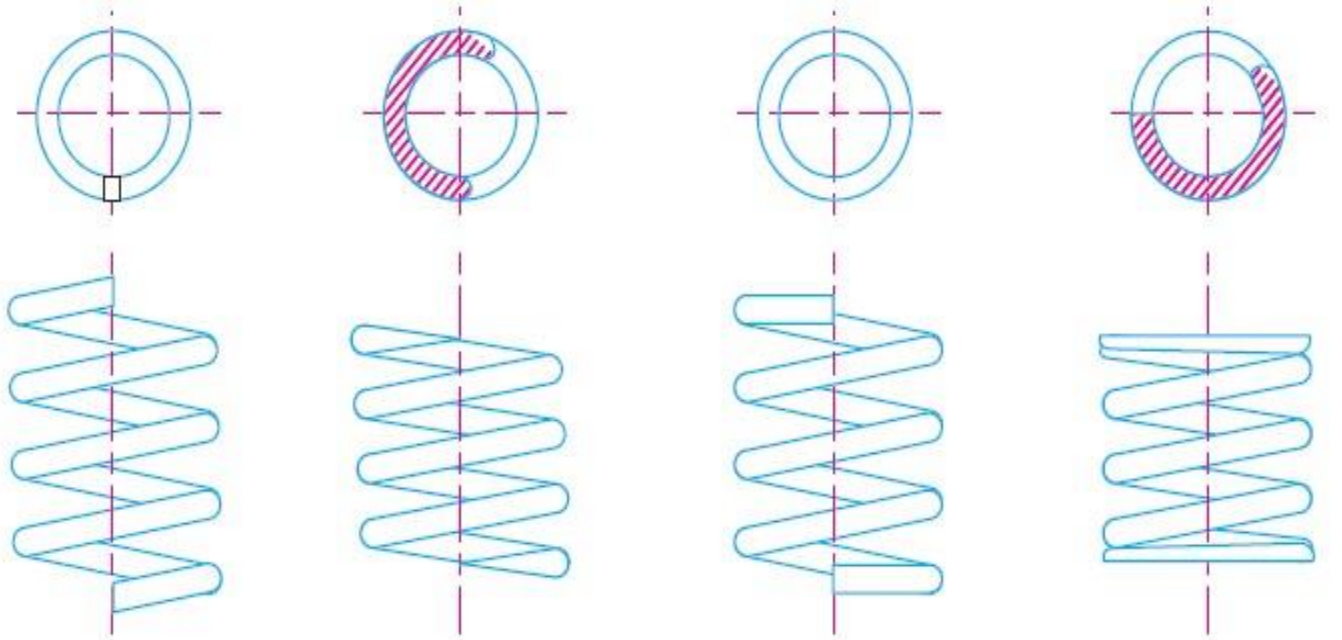

(*a*) Plain ends. (*b*) Ground ends. (*c*) Squared ends. (*d*) Squared and ground ends.

Stresses in the helical spring wire

Total number of turns, solid length and free length for different types of end connections.

Type of end	*Total number of turns (n')*	*Solid length*	*Free length*
1. Plain ends	n	$(n+1)\,d$	$p \times n + d$
2. Ground ends	n	$n \times d$	$p \times n$
3. Squared ends	$n+2$	$(n+3)\,d$	$p \times n + 3d$
4. Squared and ground ends	$n+2$	$(n+2)\,d$	$p \times n + 2d$

where n = Number of active turns,
p = Pitch of the coils, and
d = Diameter of the spring wire.

Stresses in the helical spring wire

From the free body diagram, we have found out the direction of the internal torsion T and internal shear force F at the section due to the external load F acting at the centre of the coil

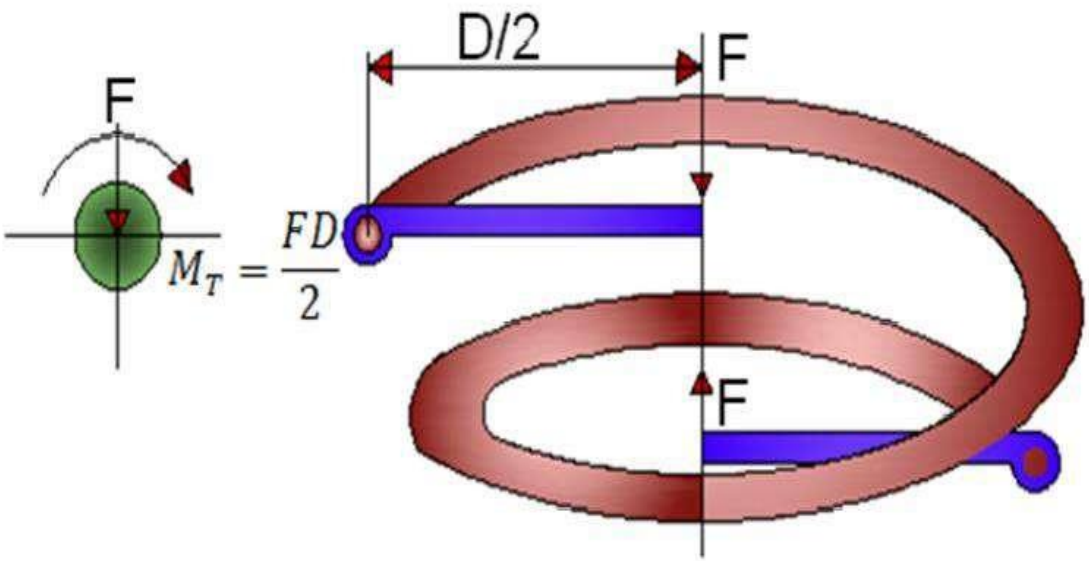

The cut sections of the spring, subjected to tensile and compressive loads respectively, are shown separately in the figure.

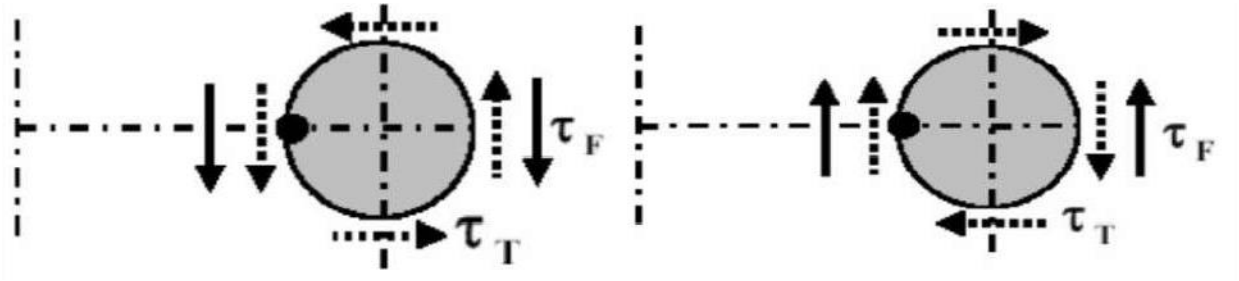

The broken arrows show the shear stress (τ_T) arising due to the torsion T and solid arrows show the shear stresses (F) due to the force (τ_F)

It is observed that for both tensile load as well as compressive load on the spring, maximum shear stress always occurs at the inner side of the spring. Hence, failure of the spring, in the form of crake, is always initiated from the inner radius of the spring. $(\tau_T + \tau_F)$

Consider a helical compression spring made of circular wire and subjected to an axial load W,

D = Mean diameter of the spring coil,

d = Diameter of the spring wire,

n = Number of active coils,

G = Modulus of rigidity for the spring material,

W = Axial load on the spring,

τ = Maximum shear stress induced in the wire,

C = Spring index = D/d,

p = Pitch of the coils, and

δ = Deflection of the spring, as a result of an axial load W.

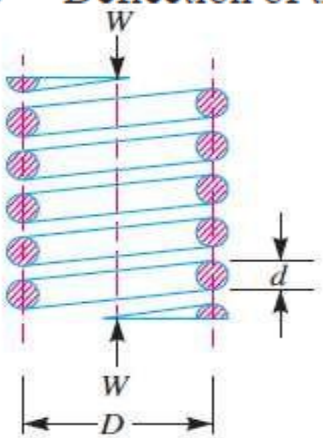

(*a*) Axially loaded helical spring.

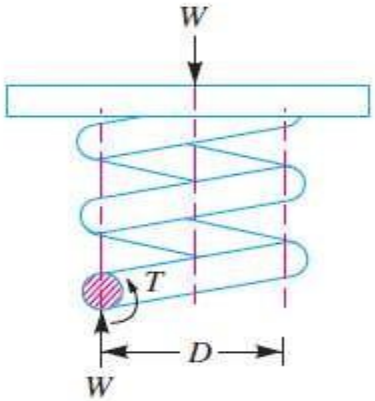

(*b*) Free body diagram showing that wire is subjected to torsional shear and a direct shear.

We know that the twisting moment,

$$T = W \times \frac{D}{2} = \frac{\pi}{16} \times \tau_1 \times d^3$$

$$\tau_1 = \frac{8W.D}{\pi\, d^3}$$

In addition to the torsional shear stress (τ_1) induced in the wire, the following stresses also act on the wire :

1. Direct shear stress due to the load W, and
2. Stress due to curvature of wire.

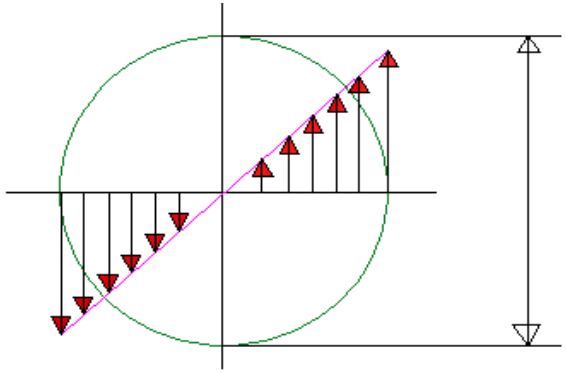

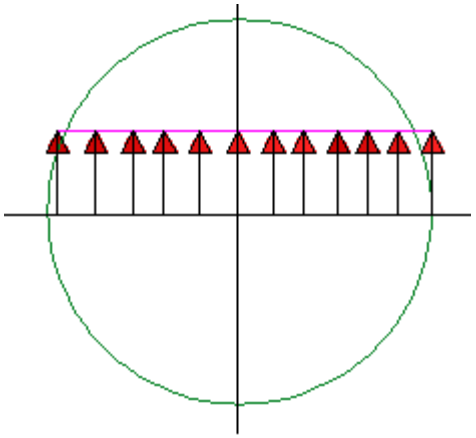

Average shear stress in the spring wire due to force F is

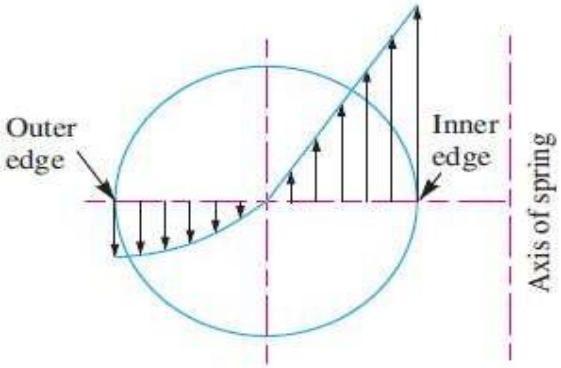

Resultant torsional shear and direct shear stress diagram.

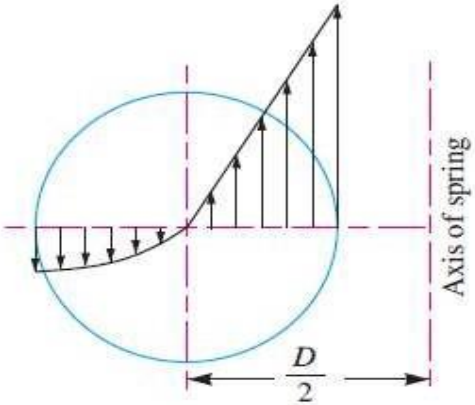

Resultant torsional shear, direct shear and curvature shear stress diagram.

We know that the resultant shear stress induced in the wire,

$$\tau = \tau_1 \pm \tau_2 = \frac{8W.D}{\pi d^3} \pm \frac{4W}{\pi d^2}$$

$\pi d \qquad \pi d$

The ***positive*** sign is used for the inner edge of the wire and ***negative*** sign is used for the outer edge of the wire. Since the stress is maximum at the inner edge of the wire, therefore

Maximum shear stress induced in the wire,

= Torsional shear stress + Direct shear stress

= Torsional shear stress + Direct shear stress

$$= \frac{8W.D}{\pi d^3} + \frac{4W}{\pi d^2} = \frac{8W.D}{\pi d^3}\left(1 + \frac{d}{2D}\right)$$

$$= \frac{8W.D}{\pi d^3}\left(1 + \frac{1}{2C}\right) = K_S \times \frac{8W.D}{\pi d^3} \qquad \text{...(iii)}$$

... (Substituting $D/d = C$)

where K_S = Shear stress factor = $1 + \frac{1}{2C}$

In order to consider the effects of both direct shear as well as curvature of the wire, a Wahl's stress factor (K) introduced by A.M. Wahl may be used. The resultant diagram of torsional shear, direct shear and curvature shear stress is shown in Fig. 23.11 (d).

∴ Maximum shear stress induced in the wire,

$$\tau = K \times \frac{8\,W.D}{\pi\,d^3} = K \times \frac{8\,W.C}{\pi\,d^2} \qquad \text{...}(iv)$$

where

$$K = \frac{4C-1}{4C-4} + \frac{0.615}{C}$$

Deflection of helical spring of circular cross section wire

Total active length of the wire,

$$l = \text{Length of one coil} \times \text{No. of active coils} = \pi D \times n$$

Let θ = Angular deflection of the wire when acted upon by the torque T.

$\therefore$ Axial deflection of the spring,

$$\delta = \theta \times D/2 \qquad \ldots(i)$$

We also know that

$$\frac{T}{J} = \frac{\tau}{D/2} = \frac{G.\theta}{l}$$

$$\therefore \qquad \theta = \frac{T.l}{J.G} \qquad \ldots\left(\text{considering } \frac{T}{J} = \frac{G.\theta}{l}\right)$$

where J = Polar moment of inertia of the spring wire

$= \frac{\pi}{32} \times d^4$, d being the diameter of spring wire.

and G = Modulus of rigidity for the material of the spring wire

Now substituting the values of l and J in the above equation, we have

$$\theta = \frac{T.l}{J.G} = \frac{\left(W \times \frac{D}{2}\right) \pi D n}{\frac{\pi}{32} \times d^4 G} = \frac{16 W.D^2.n}{G.d^4}$$

Substituting this value of θ in equation (i), we have

Substituting this value of θ in equation (i), we have

$$\delta = \frac{16 W.D^2.n}{G.d^4} \times \frac{D}{2} = \frac{8\, W.D^3.n}{G.d^4} = \frac{8\, W.C^3.n}{G.d} \qquad \ldots (\because C = D/d)$$

and the stiffness of the spring or spring rate,

$$\frac{W}{\delta} = \frac{G.d^4}{8\, D^3.n} = \frac{G.d}{8\, C^3.n} = \text{constant}$$

Energy stored in Helical Spring

We know that the springs are used for storing energy which is equal to the work done on it by some external load.

Let W = Load applied on the spring, and

δ = Deflection produced in the spring due to the load W.

Assuming that the load is applied gradually, the energy stored in a spring is,

$$U = \frac{1}{2} W.\delta \qquad ...(i)$$

We have already discussed that the maximum shear stress induced in the spring wire,

$$\tau = K \times \frac{8\,W.D}{\pi\,d^3} \text{ or } W = \frac{\pi\,d^3.\tau}{8\,K.D}$$

We know that deflection of the spring,

$$\delta = \frac{8\,W.D^3.n}{G.d^4} = \frac{8 \times \pi\,d^3.\tau}{8\,K.D} \times \frac{D^3.n}{G.d^4} = \frac{\pi\,\tau.D^2.n}{K.d.G}$$

Design against fluctuating load

Substituting the values of W and δ in equation (*i*), we have

$$U = \frac{1}{2} \times \frac{\pi d^3 . \tau}{8 K . D} \times \frac{\pi \tau . D^2 . n}{K . d . G}$$

$$= \frac{\tau^2}{4 K^2 . G} (\pi D . n) \left(\frac{\pi}{4} \times d^2 \right) = \frac{\tau^2}{4 K^2 . G} \times V$$

where V = Volume of the spring wire

= Length of spring wire × Cross-sectional area of spring wire

$$= (\pi D . n) \left(\frac{\pi}{4} \times d^2 \right)$$

Note : When a load (say P) falls on a spring through a height h, then the energy absorbed in a spring is given by

$$U = P (h + \delta) = \frac{1}{2} W . \delta$$

where W = Equivalent static load *i.e.* the gradually applied load which shall produce the same effect as by the falling load P, and

δ = Deflection produced in the spring.

- In many applications, the force acting on the spring is not constants but varies in magnitude with time. The valve springs of automotive engine subjected to millions of stress cycles during its life time.
- On the other hand, the springs in the linkages and mechanisms are subjected to comparatively less number of stress cycles.
- The spring subjected to fluctuating stresses are designed on the basis of two criteria- design for infinite life and design for finite life

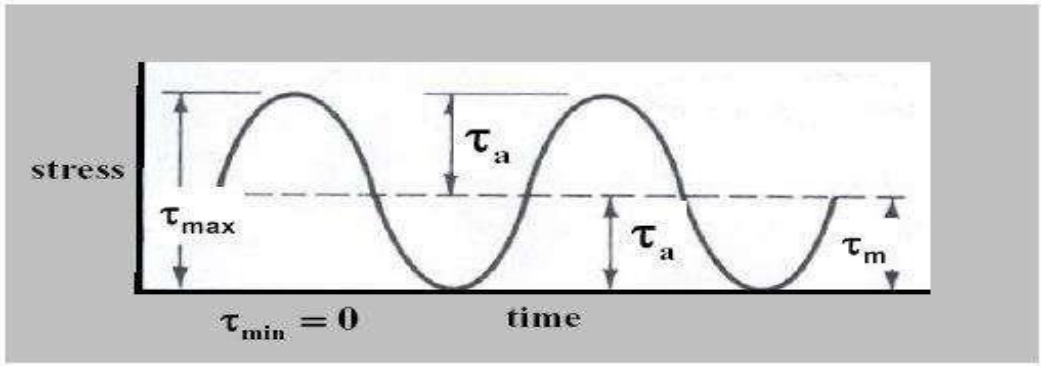

$$\frac{1}{F.S.} = \frac{\tau_m - \tau_v}{\tau_y} + \frac{2\tau_v}{\tau_e}$$

2. The value of mean shear stress (τ_m) is calculated by using the shear stress factor (K_S), while the variable shear stress is calculated by using the full value of the Wahl's factor (K). Thus

Mean shear stress,

$$\tau_m = K_s \times \frac{8 W_m \times D}{\pi d^3}$$

where $$K_S = 1 + \frac{1}{2C}; \text{ and } W_m = \frac{W_{max} + W_{min}}{2}$$

and variable shear stress, $$\tau_v = K \times \frac{8 W_v \times D}{\pi d^3}$$

where $$K = \frac{4C - 1}{4C - 4} + \frac{0.615}{C}; \text{ and } W_v = \frac{W_{max} - W_{min}}{2}$$

Design of Leaf Spring

Characteristics

1.Sometimes it is also called as a semi-elliptical spring; as it takes the form of a slender arc shaped length of spring steel of rectangular cross section.

2.The center of the arc provides the location for the axle, while the tie holes are provided at either end for attaching to the vehicle body.

3. Supports the chassis weight

4.Controls chassis roll more efficiently-high rear moment center and wide spring base.

5. Controls rear end wrap-up

6. Controls axle damping

7. Controls braking forces

8. Regulates wheelbase lengths (rear steer) under acceleration and braking Leaf

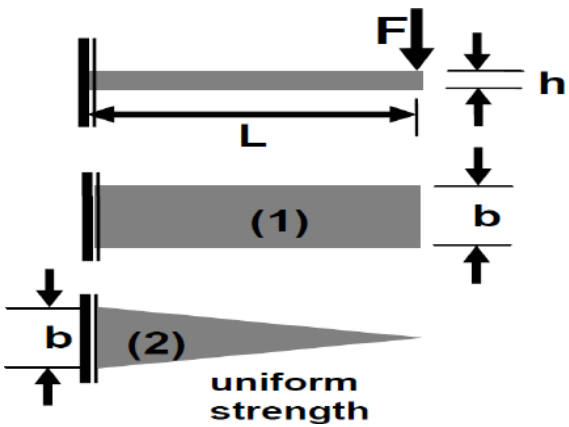

For case 1(uniform width)

$$\sigma_{max} = \frac{6FL}{bh^2}$$

$$\delta_{max} = \frac{4FL^3}{Ebh^3}$$

For case 2(non uniform width)

$$\sigma_{max} = \frac{6FL}{bh^2}$$

$$\delta_{max} = \frac{6FL^3}{Ebh^3}$$

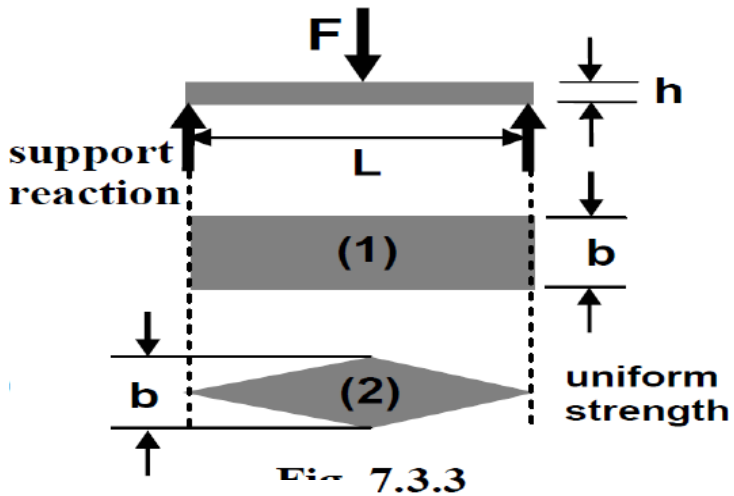

Fig. 7.3.3

For case 1(uniform width)

$$\sigma_{max} = \frac{3FL}{bh^2}$$

$$\delta_{max} = \frac{2FL^3}{Ebh^3}$$

$$\sigma_{max} = \frac{3FL}{bh^2}$$

$$\delta_{max} = \frac{3FL^3}{Ebh^3}$$

Laminated springs

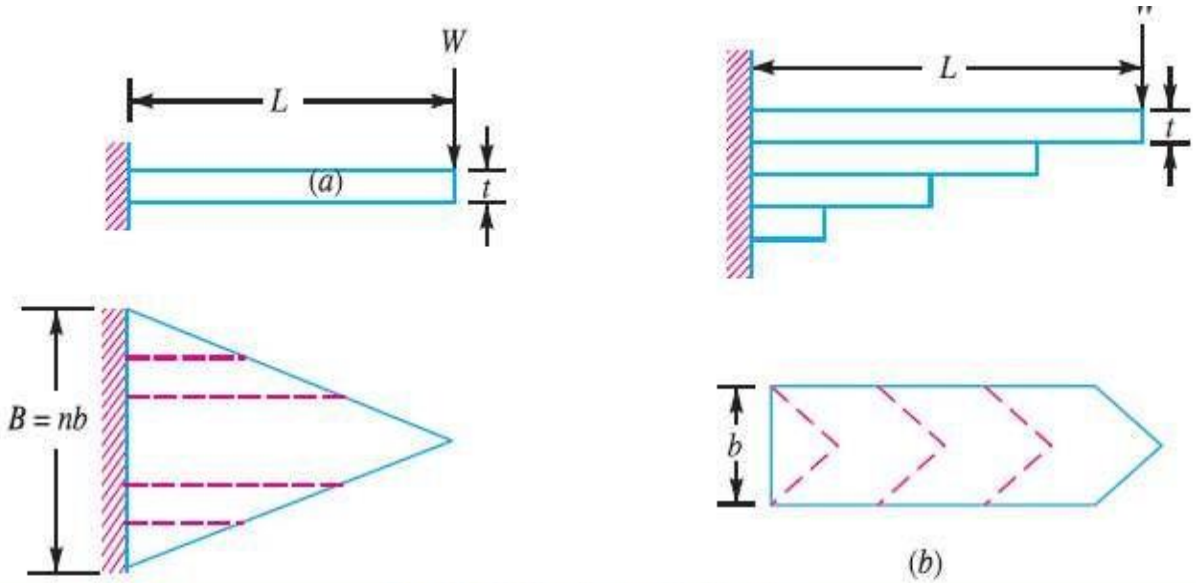

Fig. 23.29. Laminated leaf spring.

$$\sigma = \frac{6\,W.L}{n.b.t^2} \qquad \text{...(v)}$$

and

$$\delta = \frac{6\,W.L^3}{n.E.b.t^3} = \frac{\sigma.L^2}{E.t} \qquad \text{...(vi)}$$

where n = Number of graduated leaves.

∴ Bending stress for full length leaves,

$$\sigma_F = \frac{6\,W_F.L}{n_F.b\,t^2} = \frac{6\,L}{n_F.b.t^2}\left(\frac{3\,n_F}{2\,n_G + 3\,n_F}\right)W = \frac{18\,W.L}{b.t^2\,(2\,n_G + 3\,n_F)}$$

Since $\sigma_F = \frac{3}{2}\,\sigma_G$, therefore

$$\sigma_G = \frac{2}{3}\,\sigma_F = \frac{2}{3} \times \frac{18\,W.L}{b.t^2\,(2\,n_G + 3\,n_F)} = \frac{12\,W.L}{b.t^2\,(2\,n_G + 3\,n_F)}$$

The deflection in full length and graduated leaves is given by equation (*iv*), *i.e.*

$$\delta = \frac{2\,\sigma_F \times L^2}{3\,E.t} = \frac{2\,L^2}{3\,E.t}\left[\frac{18\,W.L}{b.t^2\,(2\,n_G + 3\,n_F)}\right] = \frac{12\,W.L^3}{E.b.t^3\,(2\,n_G + 3\,n_F)}$$

DESIGN OF CLUTCHES

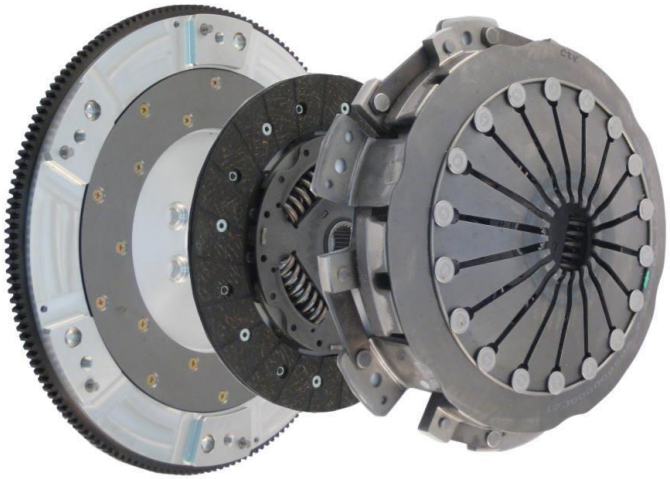

Clutches

Clutch is a mechanical device, which is used to connect/ disconnect the source of power from the remaining parts of the power transmission system at the will of the operator

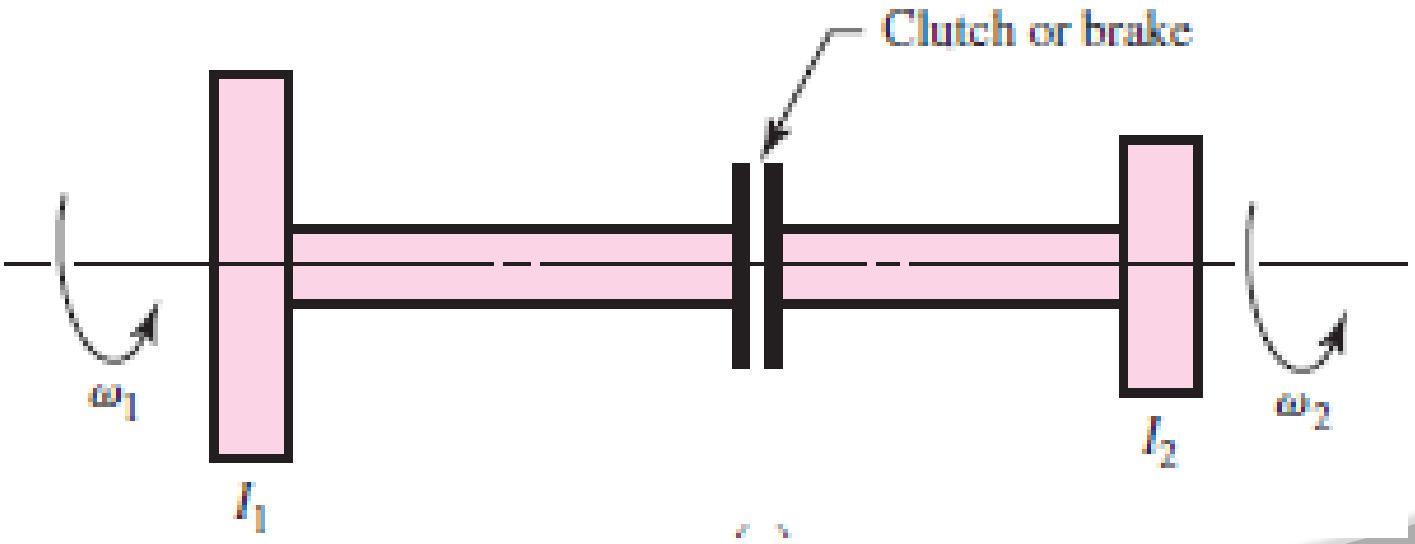

Dynamic representation of a clutch/brake (Mechanical Engineering Design: Richard G Budynas and J. Keith)

Clutches

Initial Condition

- Driving member rotating and driven member at rest

Final Condition

- Both members rotate at same speed with no relative motion

Brakes

Initial Condition

- One member (brake drum) rotating and braking member (brake shoe) is stationary

Final Condition

- Both members are at rest with no relative motion

Positive Contact Clutches

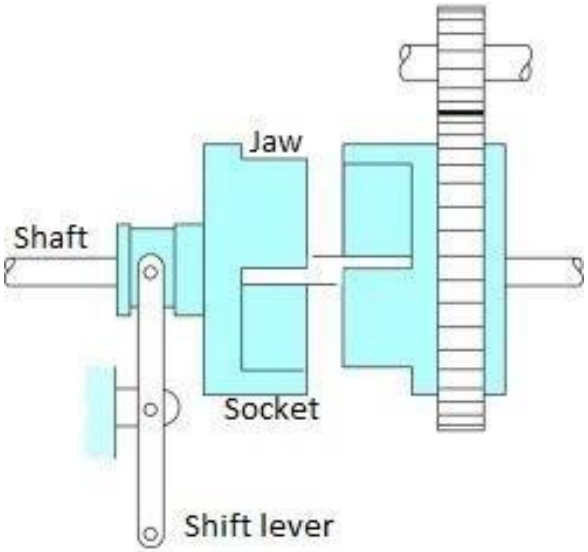

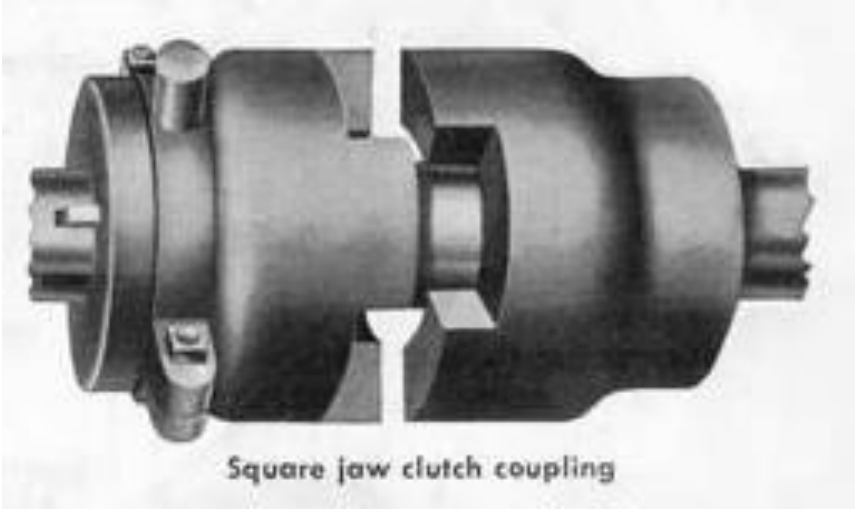

- Two halves carrying projections or halves
- One half is fixed and the other can move along the axis
- Jaws of moving half enter into socket of mating half
- Eg. Square jaw, spiral jaw

Advantages

- No slip and positive engagement
- No heat during engagement/disengagement

Drawbacks

- Engagement only when stationary or rotate at very low speed
- High speed engagement results in shocks

Positive Contact Clutches

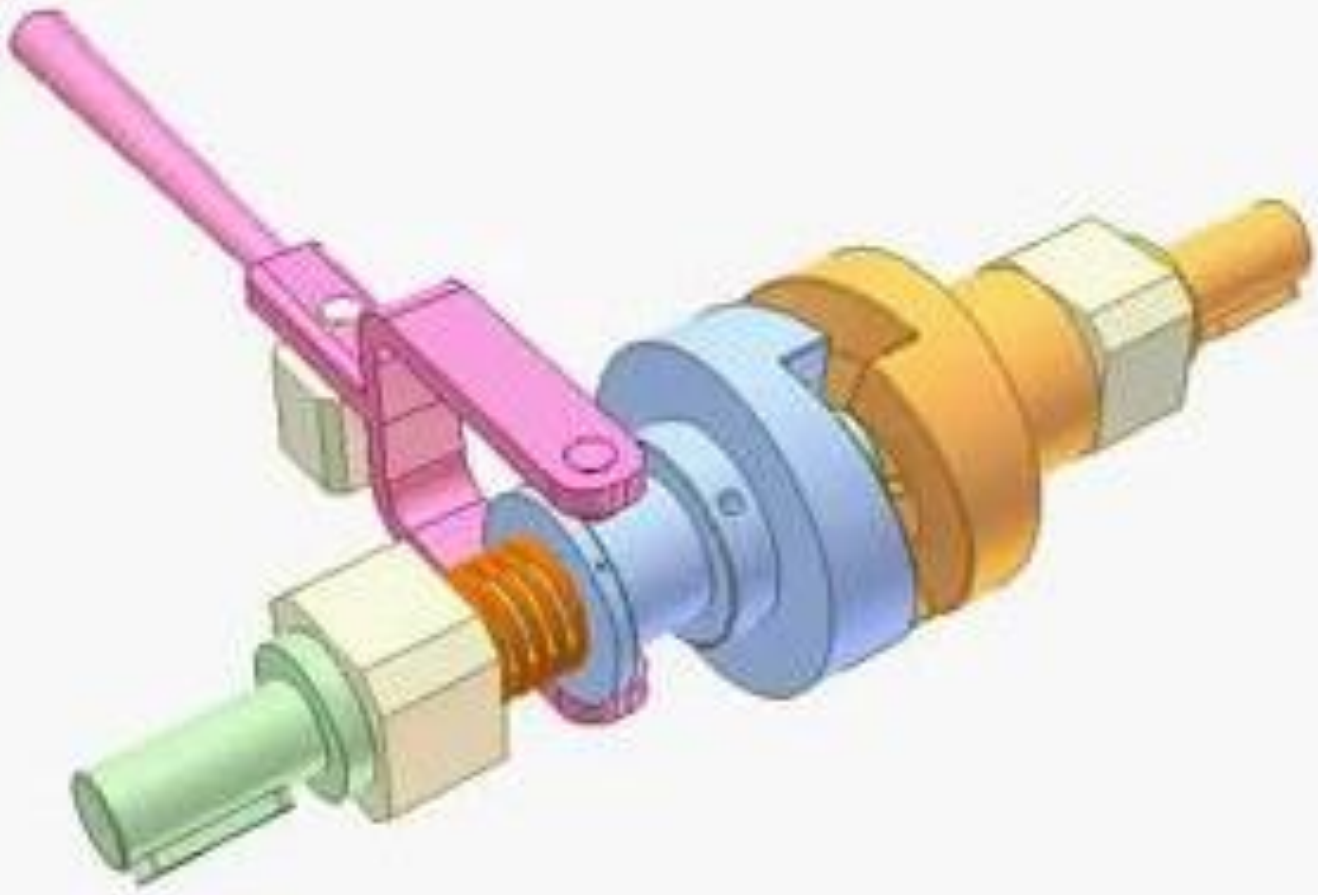

Friction Clutch: Single plate

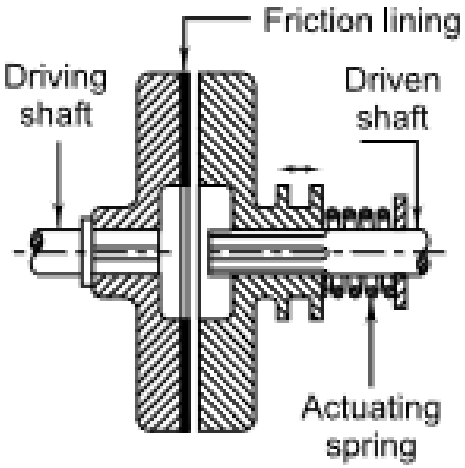

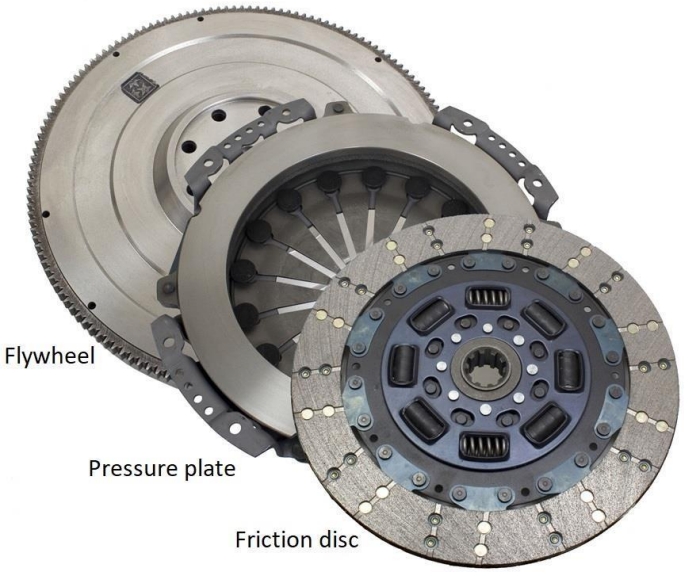

- Consists of two flanges, one rigidly keyed to driving shaft and one connected to driven shaft with splines
- Actuating force is given by spring
- Power transmission between driving and driven flange is through friction
- Fork inserted on the collar of the driven flange for axial movement of driven flange

Friction Clutch: Single plate

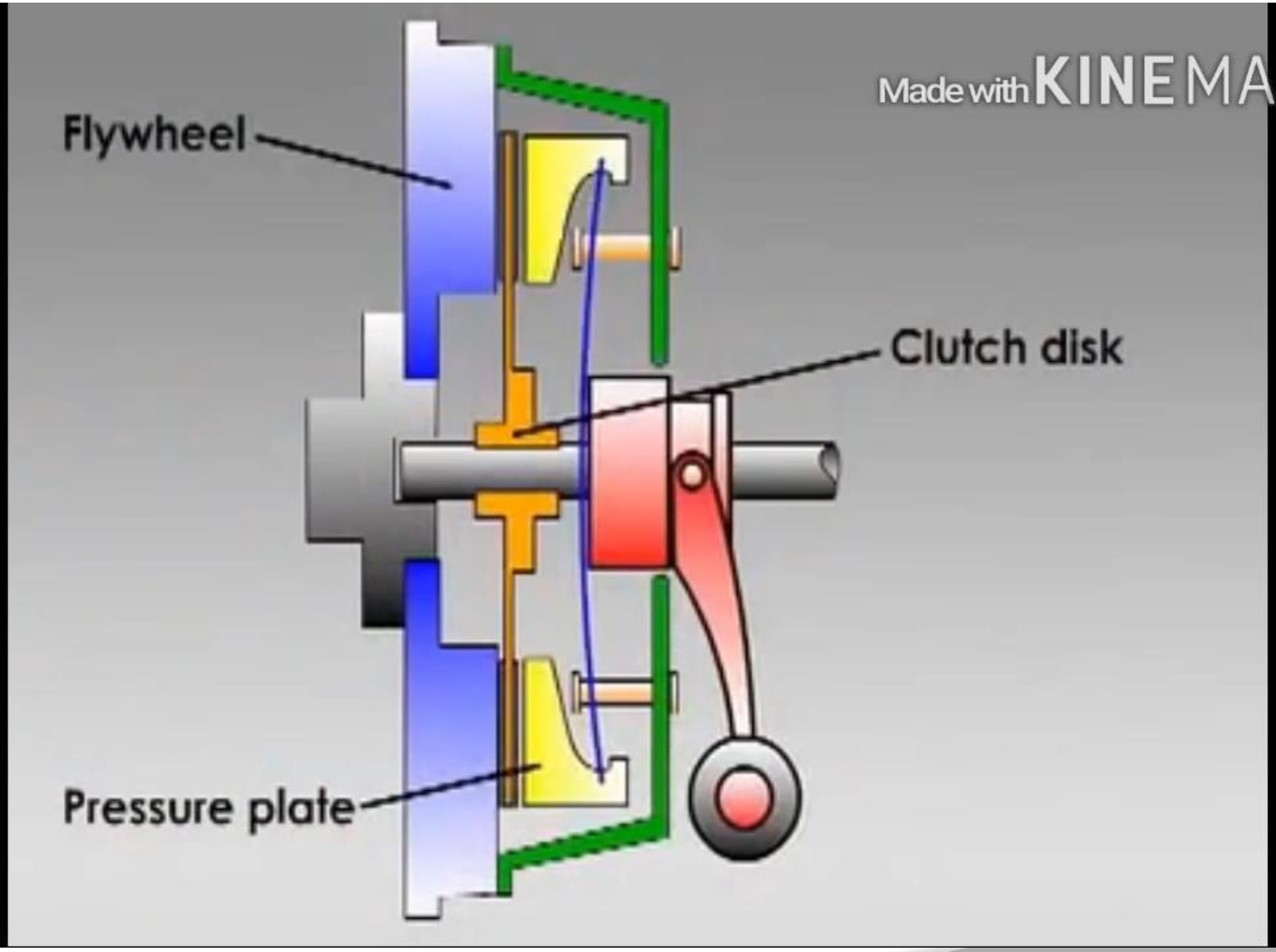

Friction Clutch: Single plate

Advantages

- Smooth engagement
- Slip only during engagement
- Acts as safety device

Design Considerations

- Selection of type of clutch
- Selection of friction material of contact surfaces
- Designing for sufficient torque capacity
- Smooth engagement/disengagement
- Provision for holding contact surface without any external assistance
- Low weight of rotating parts to reduce inertia forces
- Provision for taking or compensating wear
- Provision for carrying away the heat generated

Single plate clutch: Torque transmitting capacity

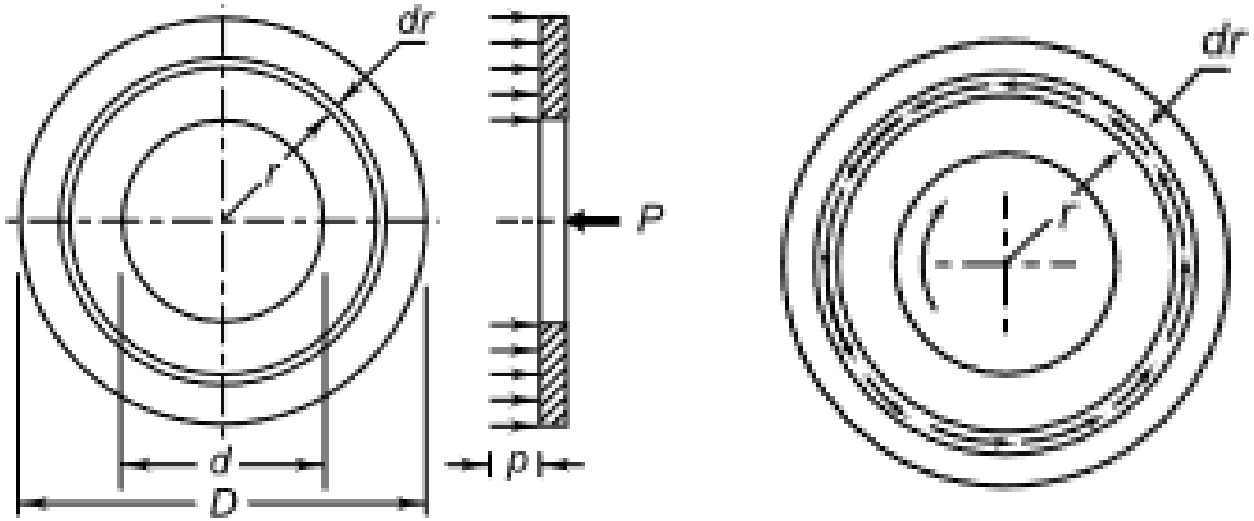

D	: Outer diameter of friction disc (mm)	:	D_o
d	: Inner diameter of friction disc (mm)	:	D_i
p	: Intensity of pressure at radius r (N/mm^2)	:	p
P	: Operating axial force (N)	:	F_{ap}
M_t	: Torque transmitted (N-mm)	:	T
μ	: Friction coefficient	:	μ
r	: radius of the element dr from the centre of the disc	:	r

Single plate clutch: Torque transmitting capacity

- **Total axial load**, $F_a = 2\pi \int_{D_i/2}^{D_o/2} prdr$
- **Total torque**, $T = 2\pi\mu \int_{D_i/2}^{D_o/2} pr^2 dr$

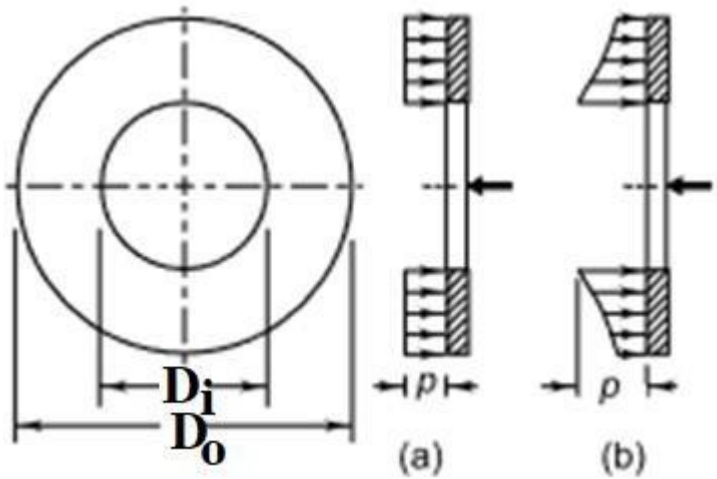

Using uniform pressure theory (New clutch)

- Total axial load, $F_{ap} = \pi p \frac{(D_o^2 - D_i^2)}{4}$ eqn 13.9a
- Total torque, $T = \frac{1}{2}\mu F_{ap} D_{mp}$: $D_{mp} = \frac{2(D_o^3 - D_i^3)}{3(D^2 - D^2)}$ eqn 13.9b

Using uniform wear theory (Worn out clutch)

- Total axial load, $F_{aw} = \pi p_{max} D_i \frac{(D_o - D_i)}{2}$ eqn 13.9d
- Total torque, $T = \frac{1}{2}\mu F_{aw} D_{mw}$: $D_{mw} = \frac{1}{2}(D_o + D_i)$ eqn 13.9e

Comparison: Uniform Pressure & Wear Theory

Total torque, $T = \frac{1}{2}\mu F_a D_m$:

- $D_{mp} = \frac{2(D_o^3 - D_i^3)}{3(D^2 - D^2)}$ **Using uniform pressure theory**
- $D_{mw} = \frac{1}{2}(D_o + D\ )$ **Using uniform wear theory**

D_o	D_i	$\frac{2(D_o^3 - D_i^3)}{3(D_o^2 - D_i^2)}$	$\frac{1}{2}(D_o + D_i)$	% difference
140	80	112.72	110	**2.4**
200	100	155.56	150	**3.5**
200	180	190.18	190	**0.08**

Single plate clutch

Conclusions

- Uniform pressure theory applicable for new friction lining
- Uniform wear theory applicable for worn-out friction lining
- Friction radius for new clutch is slightly greater than worn-out clutches
- Torque transmitting capacity of new clutch slightly higher
- Major life of friction lining comes under uniform wear criterion
- Logical and safer to use uniform wear theory in design of clutches

Factors Considered for design

- Service factor: To compensate for the starting torque
- Location of clutch: Low torque capacity requirement
- Coefficient of friction:

Problem

A plate clutch consists of one pair of contacting surfaces. The inner and outer diameters of the friction disk are 100 and 200 mm respectively. The coefficient of friction is 0.1 and the permissible intensity of pressure is 1 N/mm^2. Assuming uniform wear theory, calculate the power transmitting capacity of the clutch at 750 rpm. Calculate the power transmitting capacity of the clutch using uniform pressure theory.

Problem

An automotive clutch consists of two pairs of contacting surfaces with an asbestos friction lining. The torque transmitting capacity of the clutch is 550 N m. The coefficient of friction is 0.25 and the permissible intensity of pressure is 0.5 N/mm2. Due to space limitations, the outer diameter of the friction disk is fixed as 250 mm. Using uniform wear theory, calculate

- The inner diameter of the friction disk: and
- The spring force required to keep the clutch in an engaged position

Problem

An automotive plate clutch consists of two pairs of contacting surfaces with asbestos friction lining. The maximum engine torque is 250 N-m. The coefficient of friction is 0.35. The inner and outer diameters of friction lining are 175 and 250 mm respectively. The clamping force is provided by nine springs, each compressed by 5 mm to give a force of 800 N, when the clutch is new.

- What is the factor of safety with respect to slippage when the clutch is brand new?
- What is the factor of safety with respect to slippage after initial wear has occurred?
- How much wear of friction lining can take place before the clutch will slip?

Problem

A single plate clutch consists of one pair of contacting surfaces. Because of space limitations, the outer diameter of the friction disk is fixed as D_2. The permissible intensity of pressure is p and the coefficient of friction, μ. Assuming uniform wear theory, plot the variation of the torque transmitting capacity against the ratio of diameters (D_1/D_2). Show that the torque transmitting capacity of the clutch is maximum when (D_1/D_2) is equal to 0.577

Multi-Disk Clutches

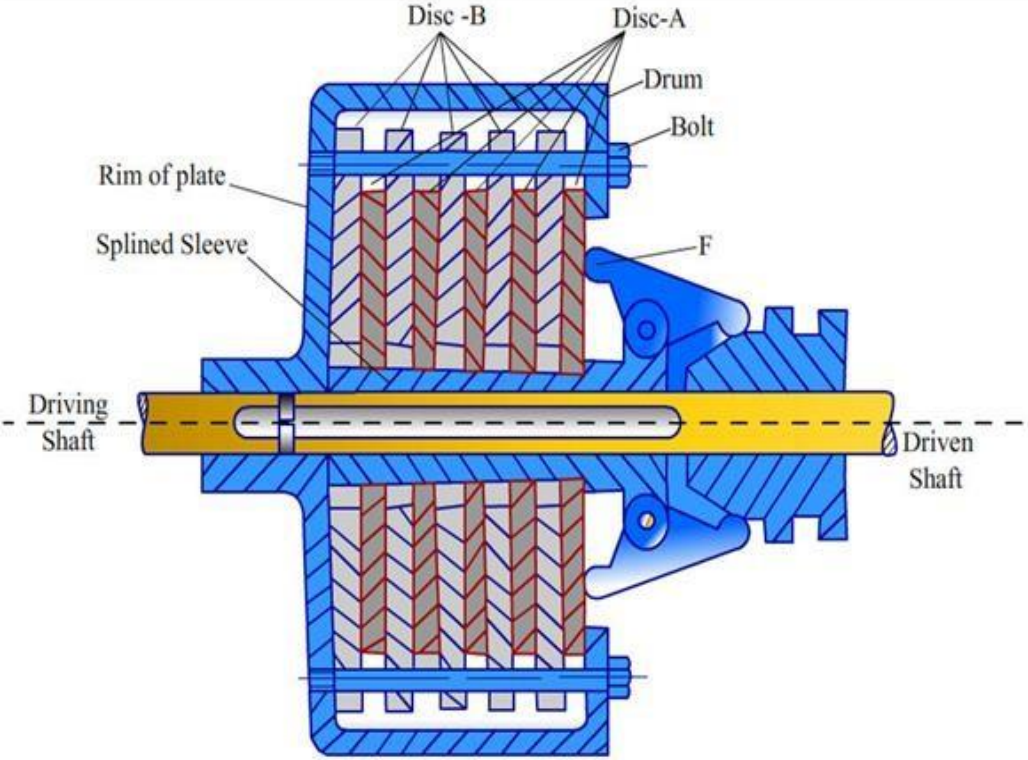

Disc B:

- Made of Bronze
- Connected by four bolts through holes
- Bolts are rigidly fixed to a rotating drum keyed to driving shaft
- Axial force required are provided by means of springs

Disc A:

- Hardened steel
- Connected to driven shaft using splines
- Free to move in axial direction

Governing Equations

- Total torque, $M_t = \frac{1}{2} i \mu F_a D_m$:

$$D_m = \frac{2(D_2^3 - D_1^3)}{3(D_2^2 - D_1^2)} \quad \text{(New clutch)}$$

$$D_m = \frac{1}{2}(D_1 + D_2) \quad \text{(worn-out clutch)}$$

- Number of friction surface, $i = i_1 + i_2 - 1$ (eqn 19-93)
- Number of driving disks, $i_1 = \frac{i}{2}$ (eqn 19-94)
- Number of driven disks, $i_2 = \frac{}{2} + 1$ (eqn 19-95)

Difference Single Plate & Multi Plate

Parameters	Single plate	Multi plate
Contacting surface	Maximum of two	Can be more than two
Torque transmitting capacity	Less	More (decreases with cooling oil)
Heat generation	Less	More
Space Requirement	More	Less
Cooling oil	Not required	Required

Difference Wet and Dry clutch

Parameters	Wet clutch	Dry clutch
Coefficient of friction	Less	More
Torque capacity	Less	High
Moisture contamination	Not a serious issue	Proper sealing required
Heat dissipation	Lubricating oil	Difficult
Wear rate	Less	More
Clutch engagement	Smooth	Rough
Surface area	Reduced (grooving's)	More

Problem

An oil immersed multi-disk clutch with cork sheet as the friction material is used on a scooter engine. The torque transmitted by the clutch is 10 N-m. The coefficient of friction between the cork sheet and the steel plate in the wet condition is 0.2. The permissible pressure on the cork sheet is 0.1 N/mm^2. The inner and outer diameters of the friction lining are 65 and 95 mm, respectively. There are radial slots, on the friction surface for the circulation of the coolant, which reduces the effective friction area. To account for these slots, the number of contacting surfaces can be increased by 5%. Assuming uniform wear theory, calculate the required number of contacting surfaces.

Problem

An oil immersed multi-disk clutch with moulded asbestos on one side and steel disks on the other, is used in an application. The torque transmitted by the clutch is 75 N-m. The coefficient of friction between the asbestos lining and the steel plate in the wet condition is 0.1. The permissible intensity of pressure on the asbestos lining is 500 kPa. The outer diameter of the friction lining is kept as 100 mm due to the space limitation. Assuming uniform wear theory, calculate the inside diameter of the disks, the required number of disks and the clamping force.

Cone Clutches

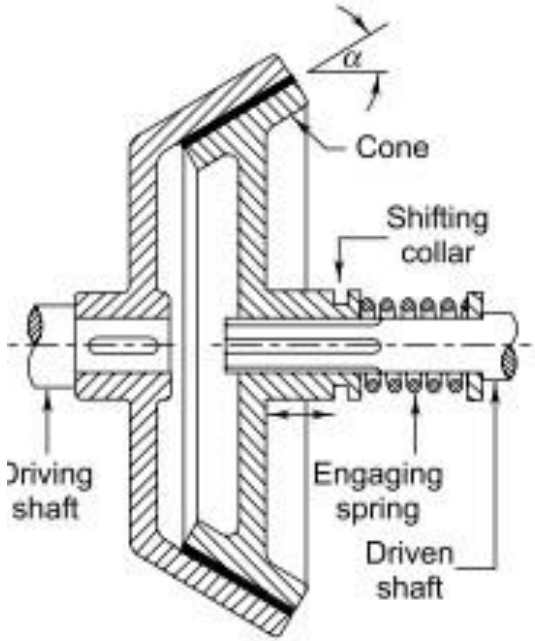

- Consists of inner and outer conical surfaces
- Outer cone keyed to driving shaft and inner cone connected to driven shaft using splines
- Wedge action causes considerable friction force with a small engaging force
- Recommended semi cone angle – 12.5^0
- Strict co-axiality required

Cone Clutches

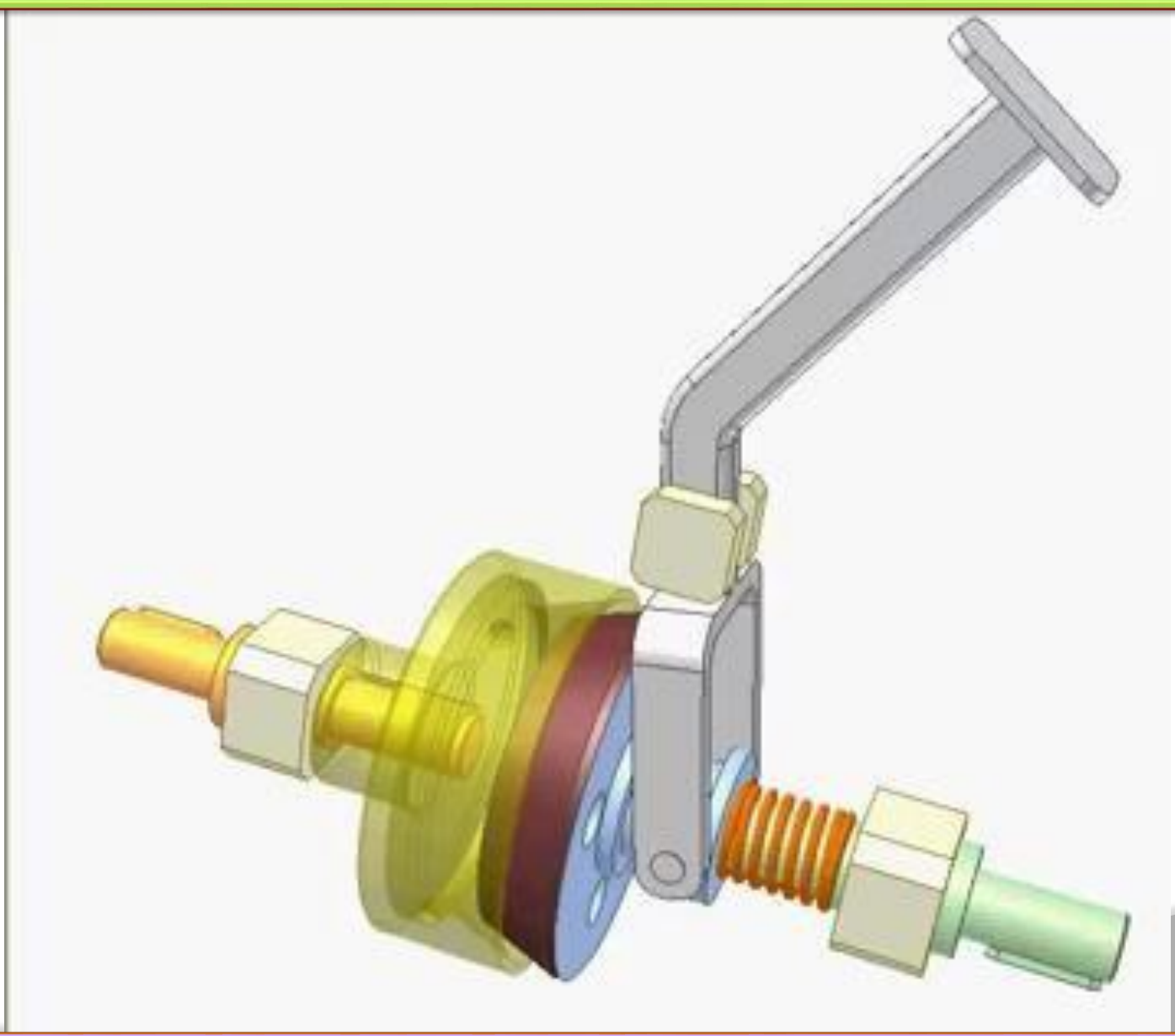

Cone Clutches: Governing Equations

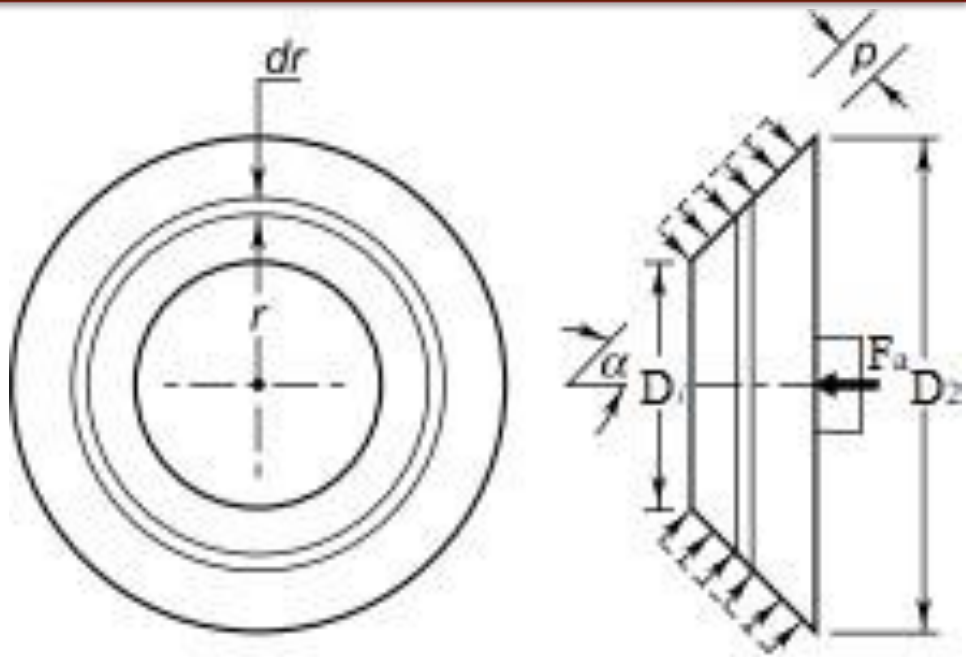

Total axial load, $F_a = \pi p \frac{(D_2^2 - D_1^2)}{4}$ (Eqn. 19-86b)

$F_a = \pi p D_1 \frac{(D_2 - D_1)}{2}$ (Eqn. 19-83)

- Total torque, $M = \frac{\mu F_a D_m}{2 \sin \alpha}$ (Eqn. 19-78)

$D_m = \frac{2(D_2^3 - D_1^3)}{3(D_2^2 - D_1^2)}$ (New clutch)

$D_m = \frac{1}{2}(D_1 + D_2)$ (worn-out clutch)

Observations: Torque Equation

- Torque capacity is inversely proportional to $\sin\alpha$
- $\alpha < \emptyset$, can cause self engagement
- For $M_t = constant,\quad F_a \infty \sin\alpha$, small axial force

  for decrease in semi cone angle

- $\frac{(M_t)_{cone}}{(M_t)_{plate}} = \frac{1}{\sin\alpha} = \frac{1}{\sin 12.5} = 4.62$

Friction materials: Desirable Properties

- High coefficient of friction
- Constant coefficient of friction for a wide range of temperature
- Good thermal conductivity
- Unaffected by environmental conditions
- Resistance to abrasive and adhesive wear
- Good resilience to provide good distribution of pressure at contacting surface

Friction materials: Types

Woven	Moulded
	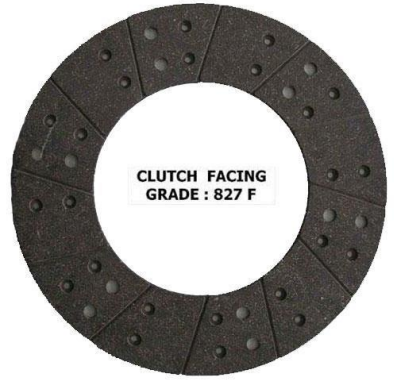
Asbestos fibre woven around brass, copper or zinc wires and impregnated with rubber or asphalt	Wet mixture of brass chips and asbestos poured into mould. Heated and pressed for curing time
Flexible	Rigid
Higher friction coefficient	Less
Cheap cost	Higher cost
Higher wear rate	Less

Friction materials: Four Basic Ingredients

- **Fibers:** Rigidity and strength (Steel wool or aramid replacing asbestos)
- **Filler:** Fills space between fibers and extend lining life (barytes, clay and calcium carbonate

  For metallic lining: fine powder is used as filler
- **Binder:** Glue that holds lining ingredients together (phenylformaldehyde)
- **Friction modifiers:** Control abrasive properties of lining (Brass and zinc)

Problem

A cone clutch with asbestos friction lining transmits 30 kW power at 500 rpm. The coefficient of friction is 0.2 and the permissible intensity of pressure is 0.35 N/mm^2. The semi-cone angle is 12.5^0. The outer diameter is fixed as 300 mm from space limitations. Assuming uniform wear theory, Calculate:

- The inner diameter
- The face width of the friction lining
- The force required to engage the clutch

Problem 1.8

A cone clutch is used to connect an electric motor running at 1440 rpm with a machine which is stationary. The machine is equivalent to a rotor of 150 kg mass and radius of gyration as 250 mm. The machine has to be brought to the full speed of 1440 rpm from stationary condition in 40s. The semi-cone angle is 12.5^0. The mean radius of the clutch is twice the face width. The coefficient of friction is 0.2 and the normal intensity of pressure between contacting surfaces should not exceed $0.1 N/mm^2$. Assuming uniform wear criterion, calculate:

- The inner and outer diameter
- The face width of friction lining
- The force required to engage the clutch
- The amount of heat generated during each engagement of clutch

Centrifugal clutches

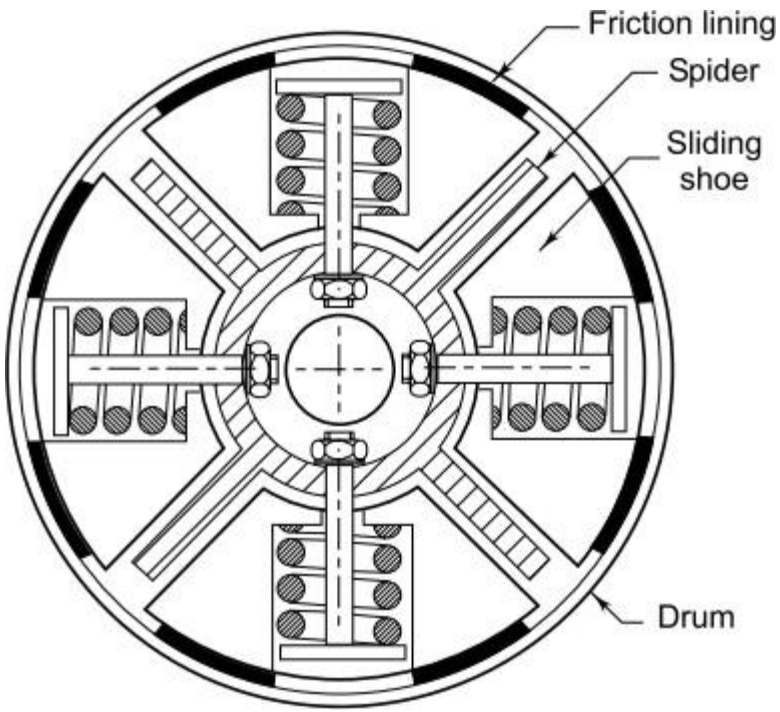

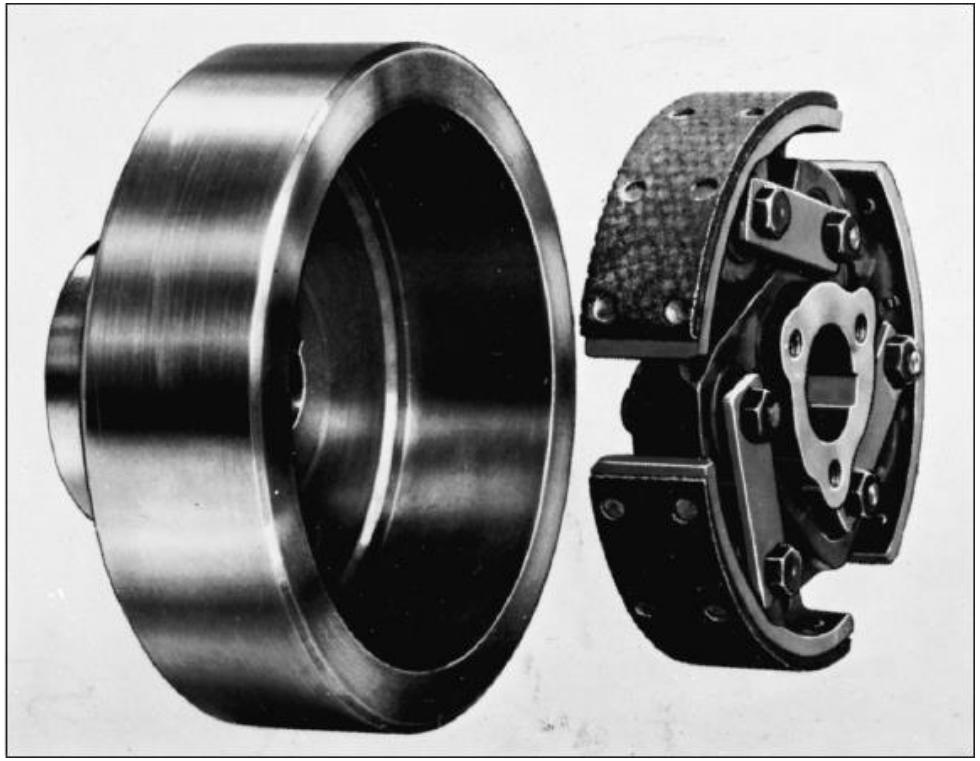

- Engages the load after a particular speed
- Helps in warm-up and acceleration without load
- Centrifugal force increases with speed which causes engagement of clutch

Centrifugal clutches: Animation

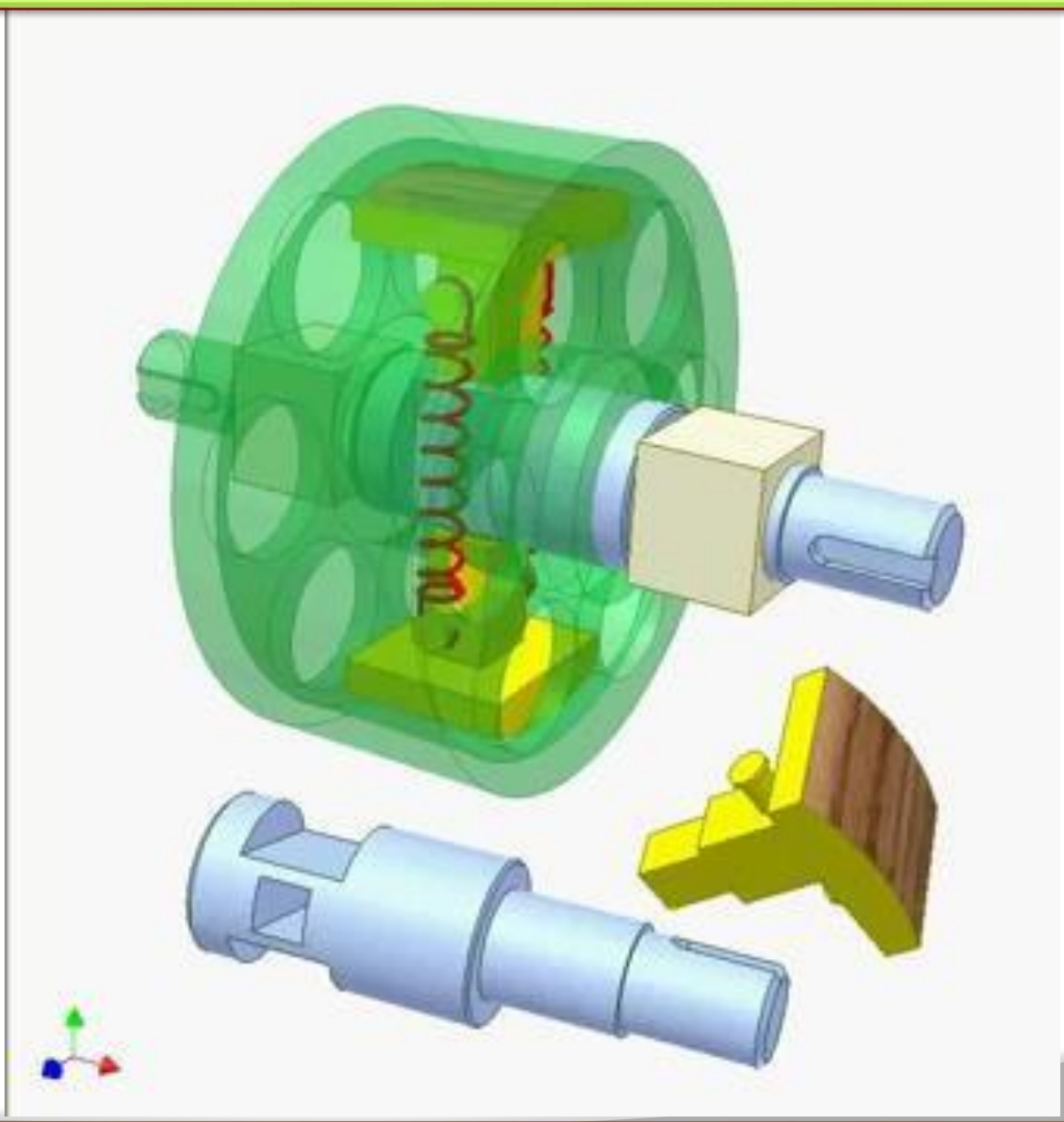

Centrifugal clutches

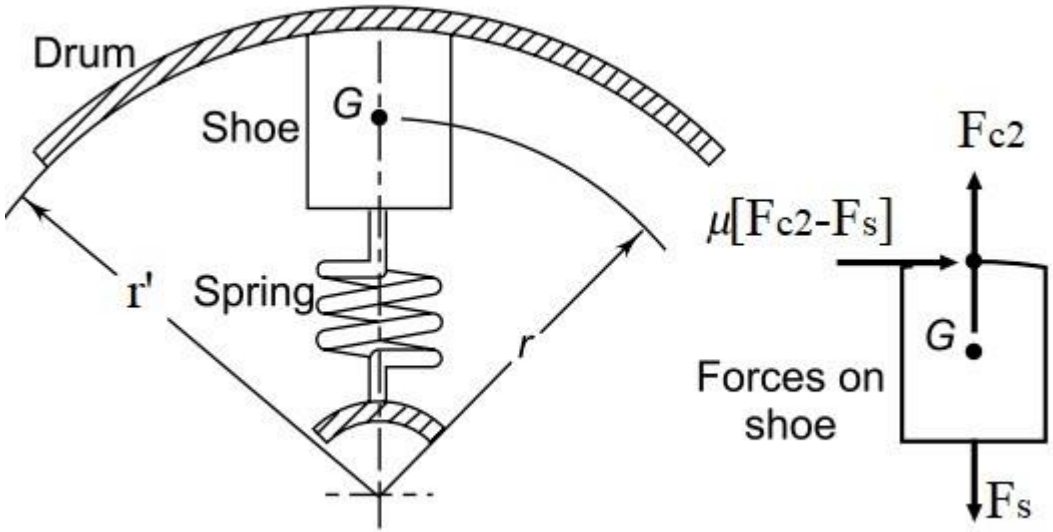

Notations used:

$r' = inner\ radius\ of\ the\ drum\ (mm)$

$r \quad = radius\ of\ the\ centre\ of\ gravity\ of\ shoe\ in\ engaged\ position\ (mm)$

$w \quad = weight\ of\ each\ shoe (N)$

$F_c = Centrifugal\ force\ (N)$

$F_s = Spring\ force\ (N)$

$i \quad = number\ of\ shoes$

$\omega_2 = running\ speed (rad/s)$

$\omega_1 = speed\ at\ which\ engagement\ starts\ (rad/s)$

Centrifugal clutches: Governing Equations

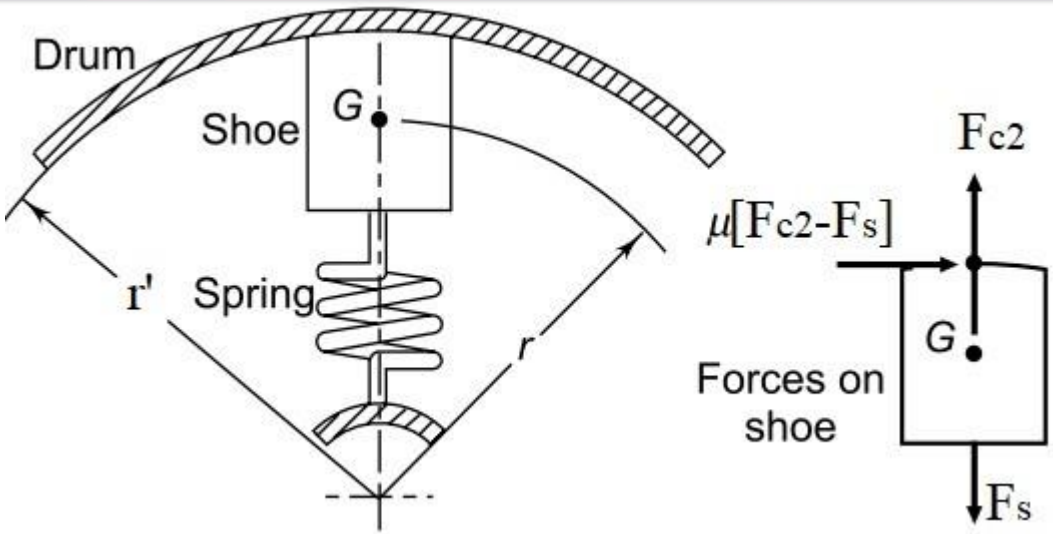

$$Force\ during\ clutch\ engagement, F_{c1} = \frac{w}{1000\,g}\omega_1^2 r$$ Eqn. 19-114

$$Outside\ radial\ force, F_{c2} = \frac{w}{1000\,g}\omega_2^2 r$$ Eqn. 19-115

$$Spring\ force, F_s = \frac{w}{1000\,g}\omega_1^2 r$$

$$Net\ force\ on\ drum, F_c = \frac{w}{1000\,g}(\omega_2^2 - \omega_1^2) r$$ Eqn.19-116a,b

$$Friction\ force, F_f = \mu\frac{w}{1000\,g}(\omega_2^2 - \omega_1^2) r$$

$$Fritction\ torque, M = \mu\frac{w}{1000\,g}(\omega_2^2 - \omega_1^2) r r'$$ Eqn.19-118

Problem

A centrifugal clutch, transmitting 20kW at 750 rpm consists of four shoes. The clutch is to be engaged at 500 rpm. The inner radius of the drum is 165 mm. The radius of the centre of gravity of the shoes is 140 mm, when the clutch is engaged. The coefficient of friction is 0.3, while the permissible pressure on friction lining is 0.1 N/mm^2. Calculate:

- The mass of each shoe
- The dimensions of friction lining

Problem

A centrifugal clutch consists of four shoes, each having a mass of 1.5 kg. In the engaged position, the radius to the centre of gravity of each shoes is 110 mm, while the inner radius of the drum is 140 mm. The coefficient of friction is 0.3. The pre-load in the spring is adjusted in such a way that the spring force at the beginning of engagement is 700 N. The running speed is 1440 rpm. Calculate:

- The speed at which the engagement begins
- The power transmitted by the clutch at 1440 rpm

Problem

Design a single plate automobile clutch to transmit a maximum torque of 250 N-m at 2000 rpm. The outside diameter of the clutch is 250 mm and the clutch is engaged at 55 km/h. Find

- The inner diameter
- The number of revolutions of the clutch slip during engagement and
- Heat to be dissipated by the clutch for each engagement

Following additional data available are

- Engine torque during engagement= 100 N-m
- Mass of automobile= 1500 kg
- Diameter of the automobile wheel = 0.7
- Moment of inertia of combined engine parts, flywheel and input side of the clutch = 1 kg-m^2
- Gear reduction ratio at differential = 5
- Torque at rear wheels available for accelerating automobile = 175 Nm
- Coefficient of friction of clutch material = 0.3
- Permissible pressure = 0.13 N/mm^2

Problem

A single dry plate clutch is to be designed to transmit 7.5 KW at 900 rpm. Find

- Diameter of the shaft, Allowable Shear stress of shaft, $r_1 = 40\ N/mm^2$
- Mean radius and face width of friction lining assuming ratio of mean radius to the face width as 4
- Outer and inner radii of the clutch plate
- Dimensions of the spring assuming no of springs are 6 and spring index= 6. The allowable shear stress of the spring wire may be taken as 420 MPa.
- Assume missing data

Brakes

A mechanical device, which is used to absorb the energy possessed by a moving system or mechanism by means of friction.

Energy absorbed can be:

- **Potential energy**- Hoists and elevators
- **Kinetic energy**-Moving vehicle

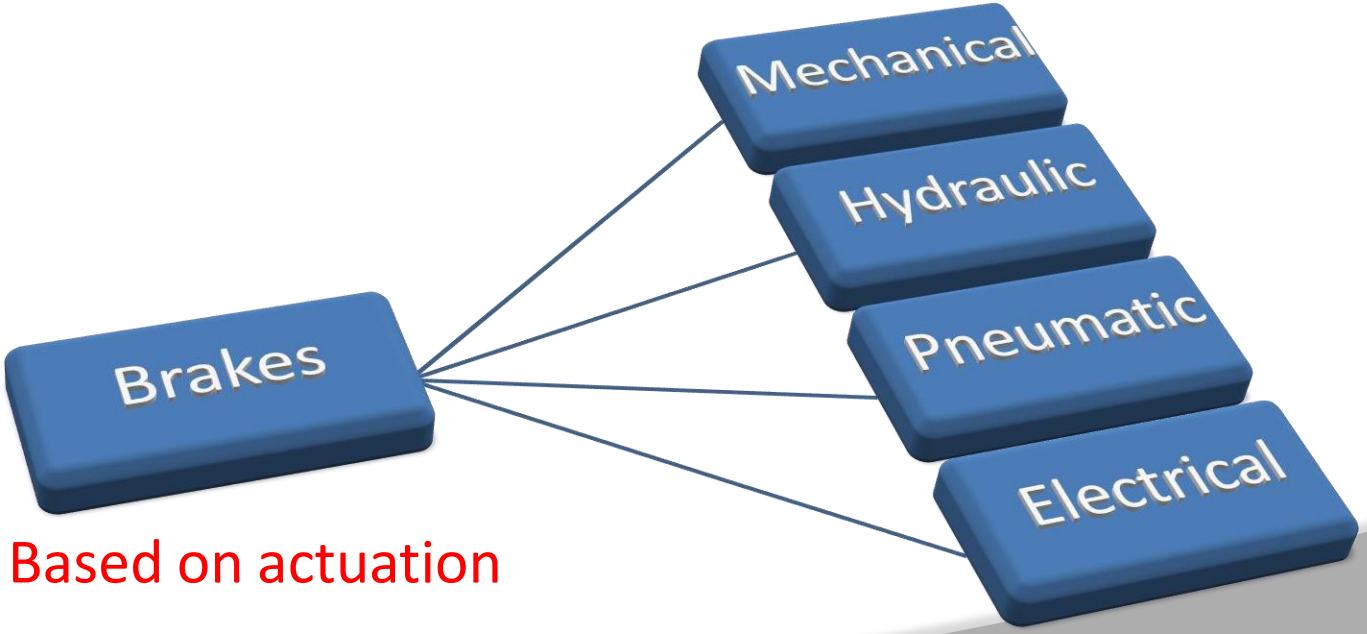

Based on actuation

Brakes: Types

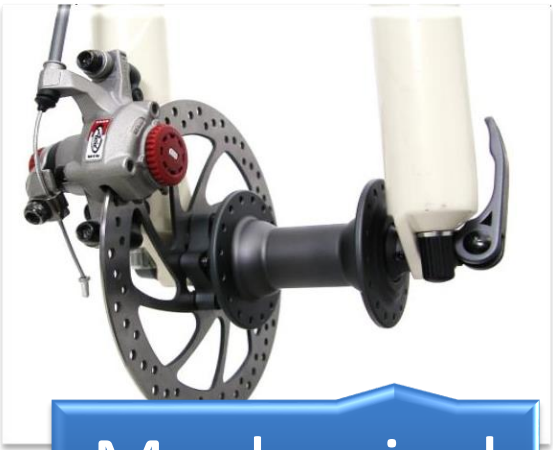

Mechanical

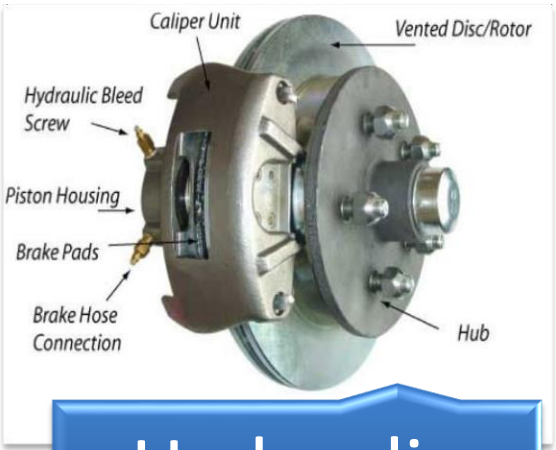

Hydraulic

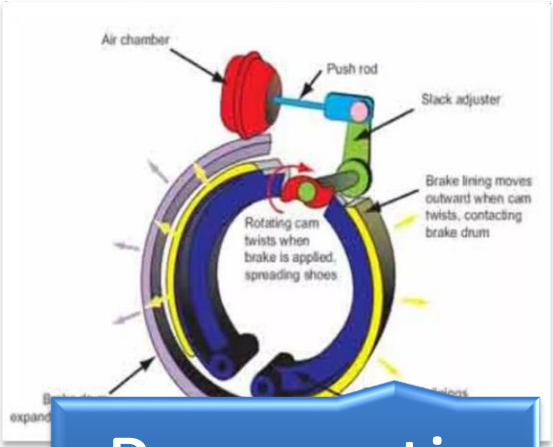

Pneumatic

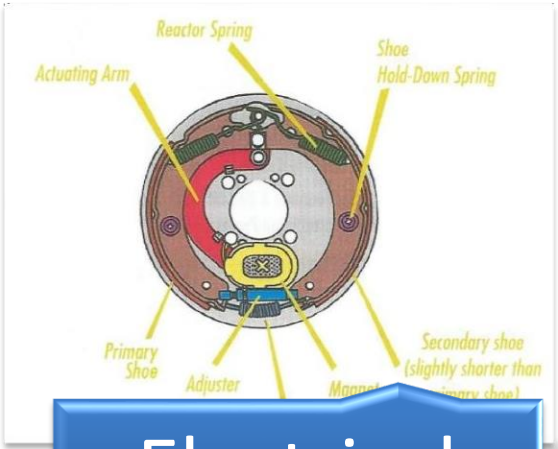

Electrical

Brakes: Energy Equations

For a mechanical system moving with a mass, m and velocity v_1 slowing down to v_2 during the period of braking

$$K.E = \frac{1}{2}m(v_1^2 - v_2^2) \qquad \text{(Eqn 19:135a)}$$

For a rotating body,

$$(K.E)_r = \frac{1}{2}I(\omega_1^2 - \omega_2^2) \qquad \text{(Eqn 19:136)}$$

In hoists

$$P.E = mgh$$

Total energy, E

$$E = K.E + (K.E)_r + P.E$$

Total energy = work done

$$E = M_t\theta$$

Problem

A four wheeled automobile car has a total mass of 1000 kg. The moment of inertia of each wheel about a transverse axis through its centre of gravity is 0.5 kg-m^2. The rolling radius of the wheel is 0.35 m. The rotating and reciprocating parts of the engine and the transmission system are equivalent to a moment of inertia of 2.5 kg-m^2, which rotates at 5 times the road-wheel speed. The car is travelling at a speed of 100 km/h on a plane road. When the brakes are applied, the car decelerates at 0.5 g. The are brakes on all four wheels. Calculate:

- The energy absorbed by each brake
- The torque capacity of each brake

Problem

A mass of 2500 kg is lowered at a velocity of 1.5 m/s from the drum as shown in Figure. The mass of the drum is 50 kg and its radius of gyration can be taken as 0.7 m. On applying the brake, the mass is brought to rest in a distance of 0.5 m. Calculate:

- The energy absorbed by the brake
- The torque capacity of the brake

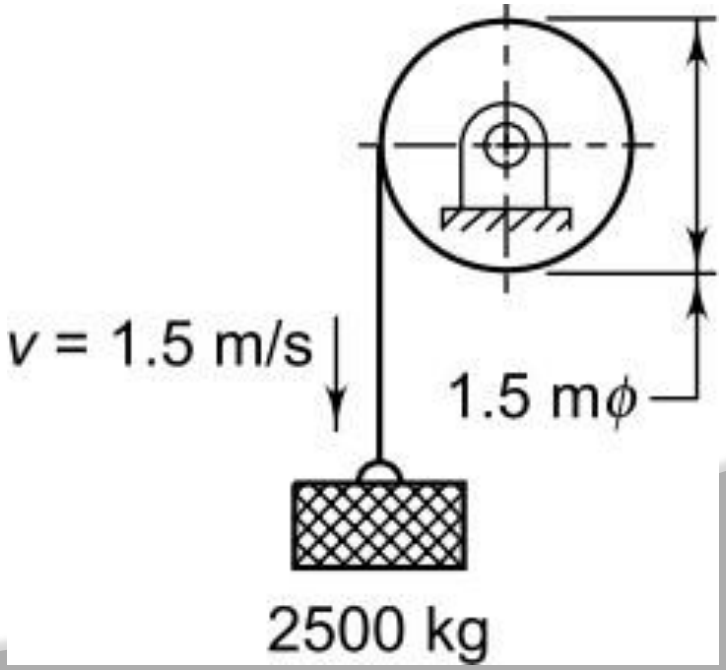

Block Brake: Short Shoe

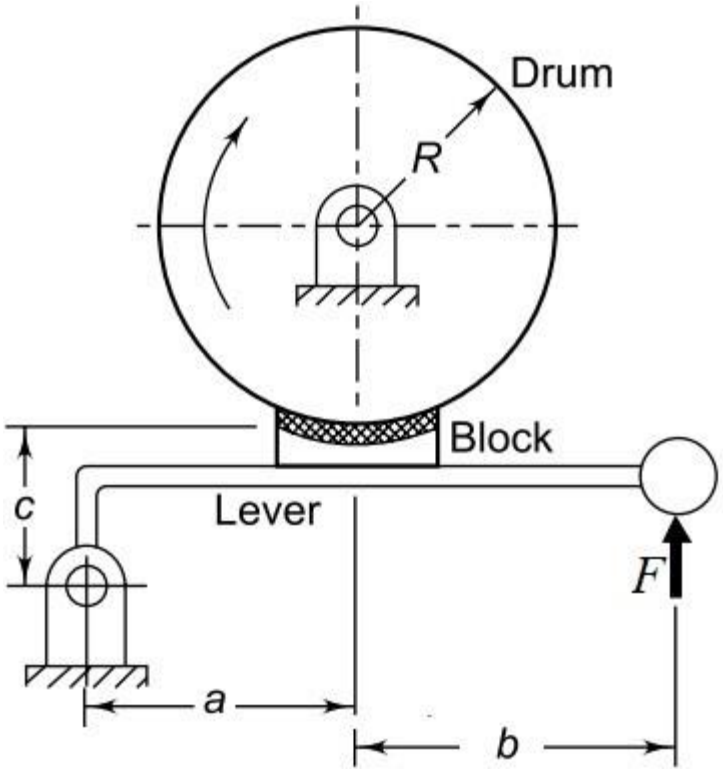

- **Block brake**: A simple block pressed against rotating drum
- Friction between block and brake drum causes retardation
- Commonly employed in railway wagons
- Angle of contact between the block and brake drum is usually small
- Intensity of pressure is uniform

Block Brakes: Short Shoe

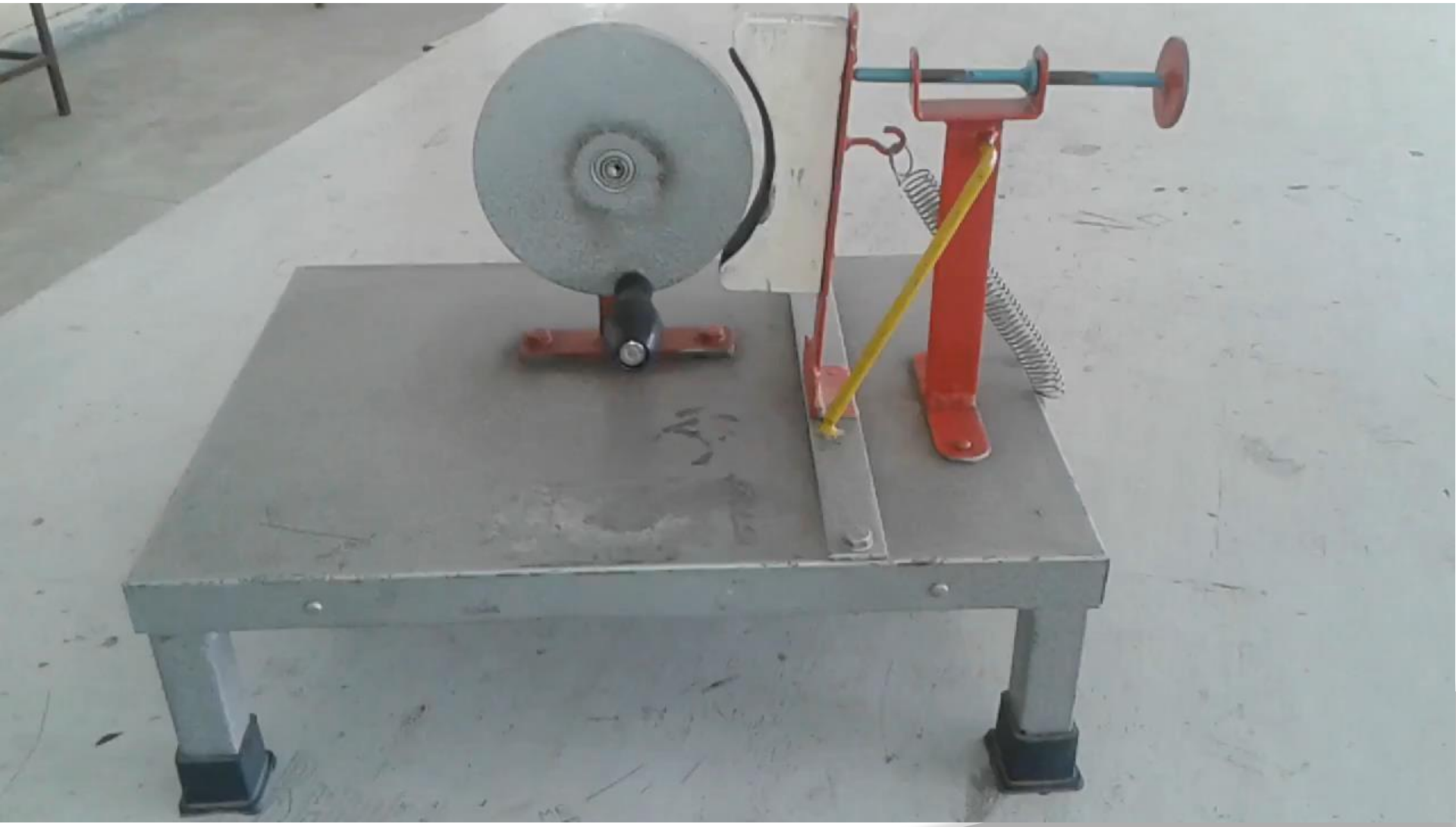

Brake Capacity

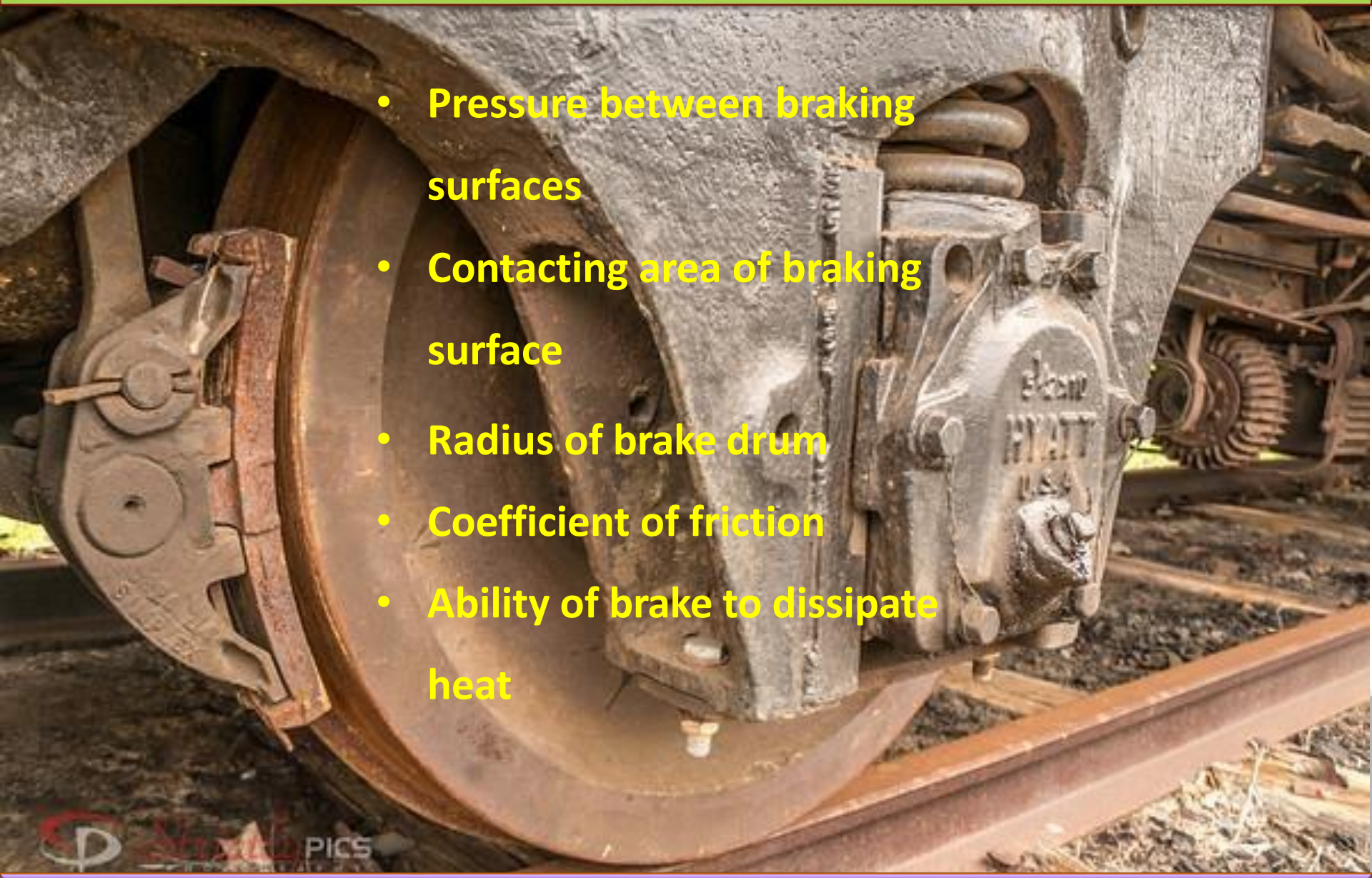

- Pressure between braking surfaces
- Contacting area of braking surface
- Radius of brake drum
- Coefficient of friction
- Ability of brake to dissipate heat

Block Brake: Short Shoe

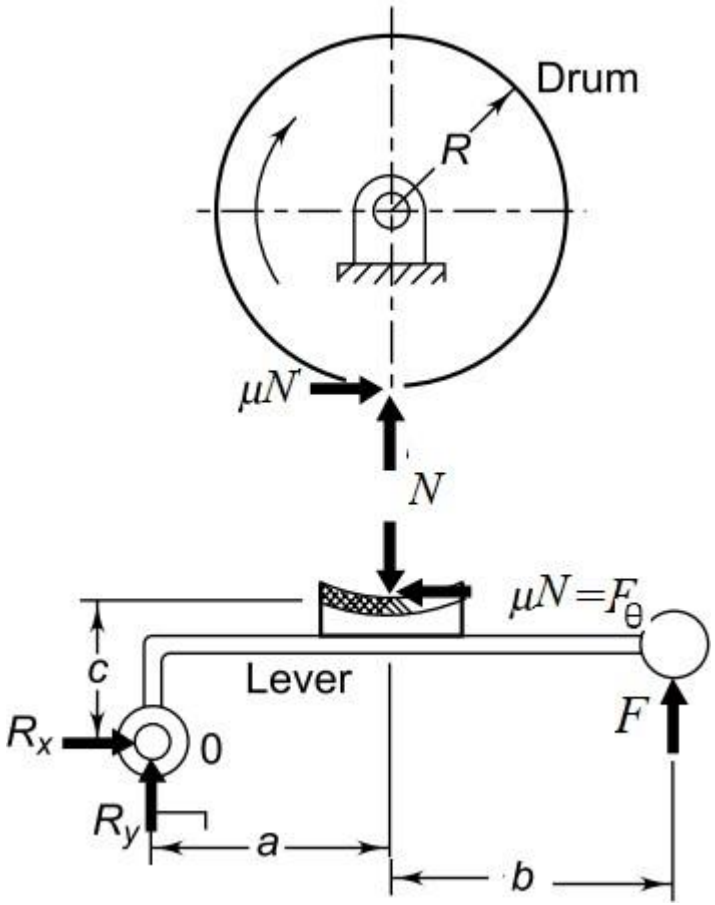

$$F = \frac{F_\theta a}{a+b}\left(\frac{1}{\mu} - \frac{c}{a}\right)$$

(Eqn:19-145)

Assumptions:

- Block is rigidly attached to the lever
- Angle of contact small, resulting in uniform pressure distribution
- Brake drum rotating in clockwise direction

Notations:

- $M_t = braking\ torque$
- $R = Radius\ of\ the\ drum$
- $\mu N = F_\theta = Frictional\ force$
- $p = permissible\ pressure\ intensity$
- $l = length\ of\ the\ block$
- $w = width\ of\ the\ block$

$$\boldsymbol{M_t = \mu N R}$$
$$\boldsymbol{N = plw}$$

Optimum width

$$\frac{1}{4}\,drum\ diameter < w < \frac{1}{2}\,drum\ diameter$$

Problem

A single block brake with a torque capacity of 250 N-m is shown in Figure. The brake drum rotates at 100 rpm and the coefficient of friction is 0.35. Calculate:

- The actuating force and the hinge-pin reaction for clockwise rotation of the drum:
- The actuating force and hinge-pin reaction for anti clockwise rotation of the drum
- The rate of heat generated during the braking action
- The dimensions of the block, if the intensity of pressure between the block and brake drum is 1 N/mm^2. The length of the block is twice its width.

State whether the brake is self-locking

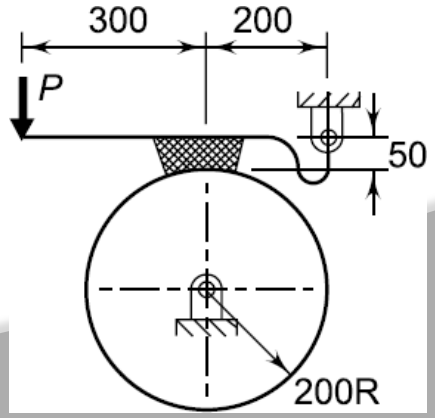

Problem

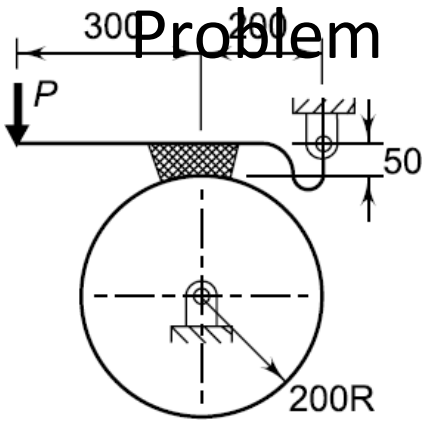

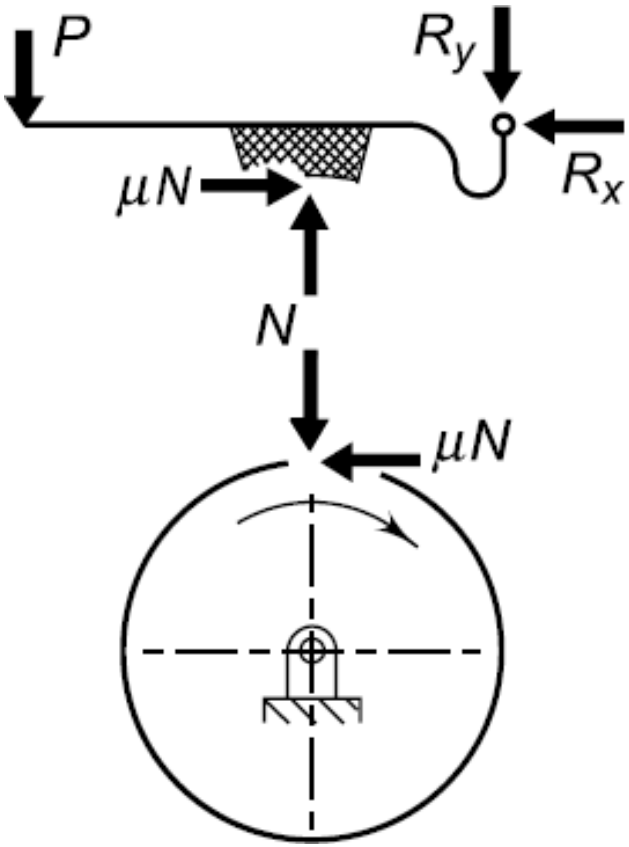

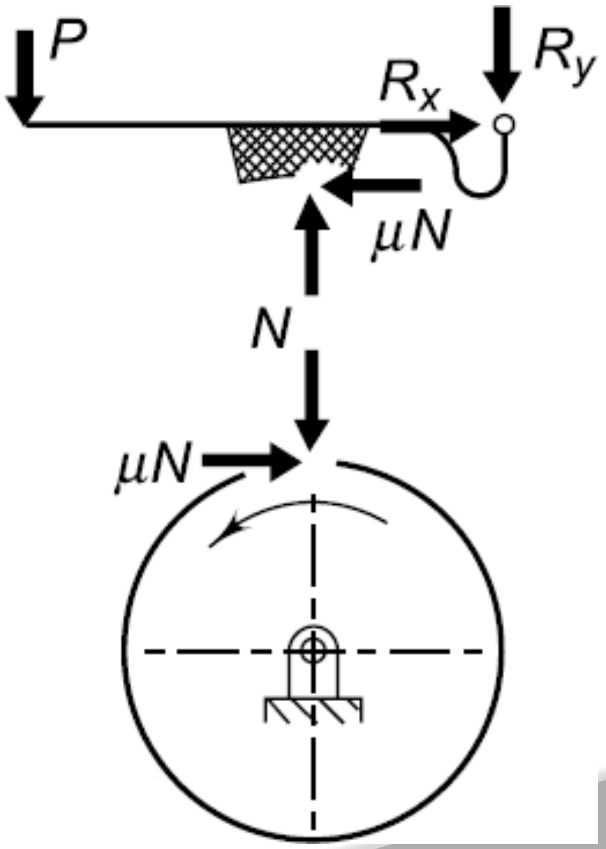

Problem

A double brake is shown in Figure. The brake drum rotates in clockwise direction and the actuating force is 500 N. The coefficient of friction between the blocks and the drum is 0.35. Calculate the torque absorbing capacity of the brake.

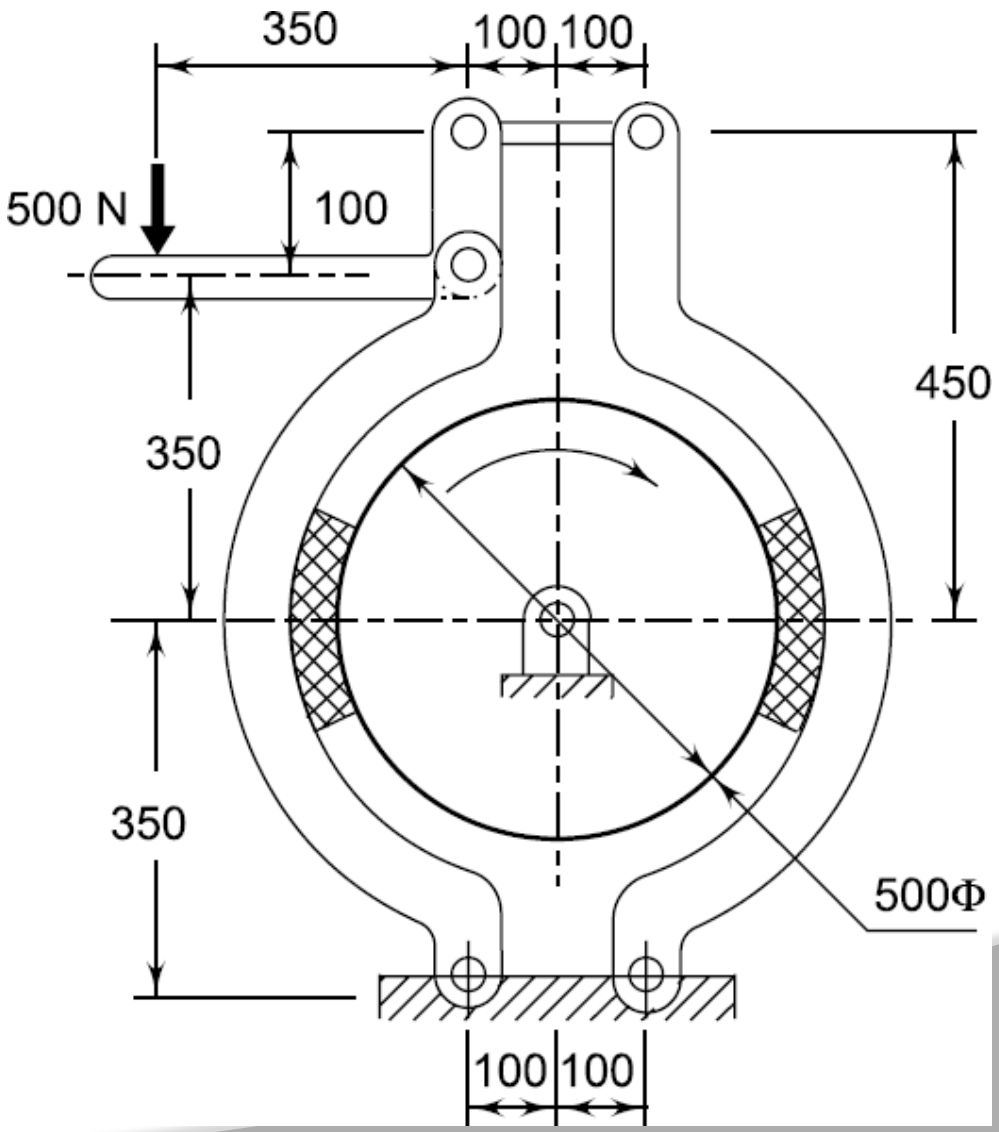

Problem

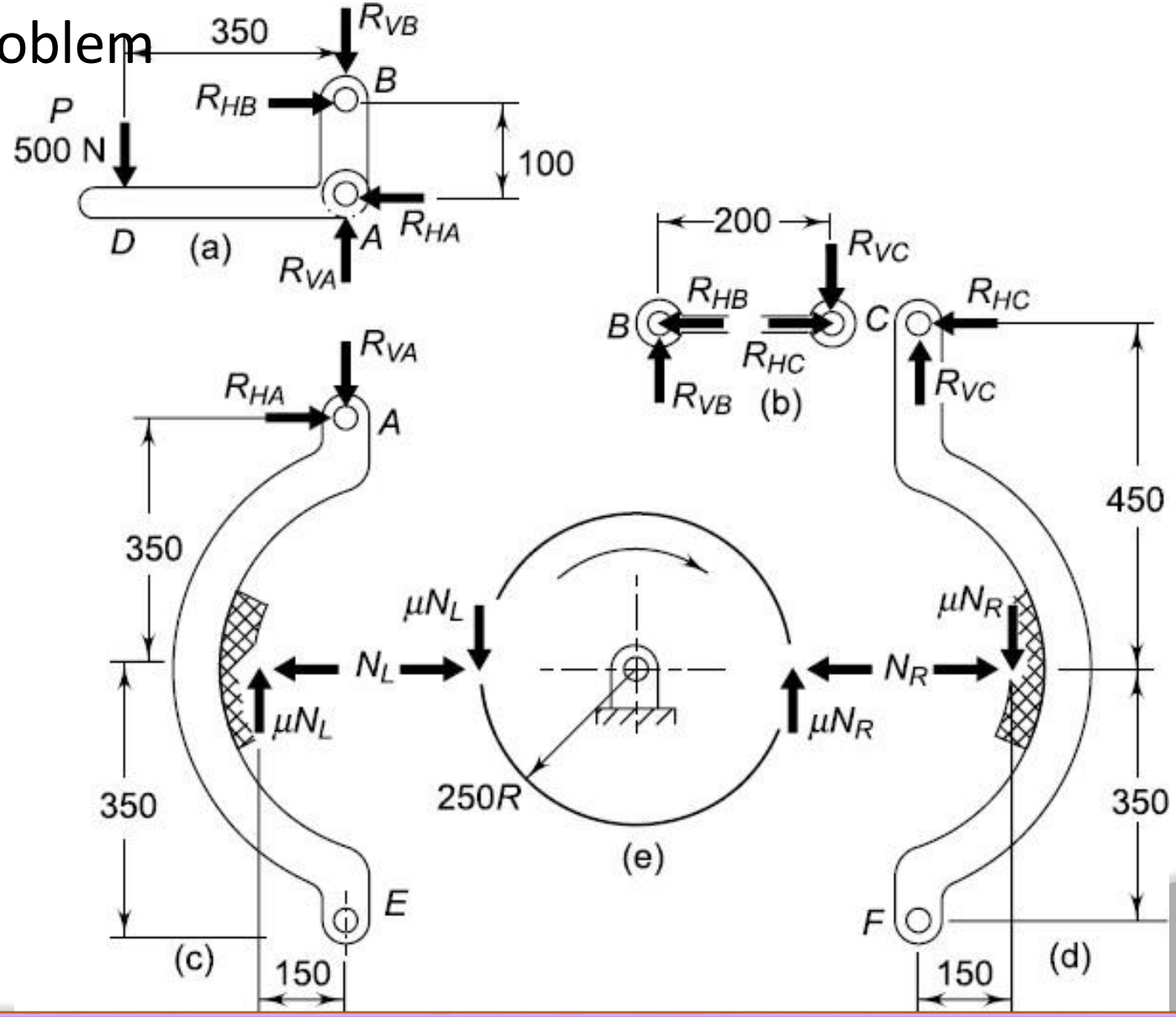
350
R_{VB}
B
R_{HB}
P
500 N
100
D
(a)
A
R_{HA}
R_{VA}
200
R_{VC}
R_{HB}
B
C
R_{HC}
R_{HC}
R_{VB}
(b)
R_{VC}
R_{VA}
R_{HA}
A
450
350
μN_L
μN_R
N_L
N_R
μN_L
μN_R
350
250R
350
(e)
E
F
(c)
150
(d)
150

Problem

A block brake with a short shoe is shown in Figure. It is to be designed so that the product pv is limited to 2.

Where,

p = normal pressure between friction lining and the brake drum (N/mm2)

v= peripheral velocity of brake drum (m/s)

The coefficient of friction between the brake drum and the friction lining is 0.2. The cable drum is connected to the brake by means of a pair of spur gears. The brake drum rotates four times as fast as the cable drum. The permissible intensity of pressure on friction lining is 1N/mm2. Calculate:

(i) The magnitude of the brake shoe force

(ii) The area of friction lining

(iii) The uniform velocity at which the mass can be lowered

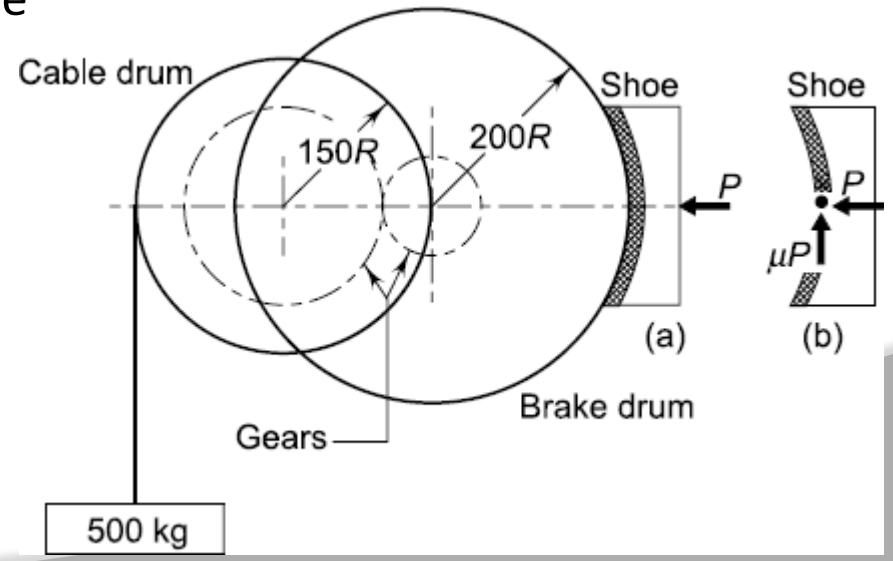

Block Brake: Long Shoe

- Short Shoe: Angle of contact less than 45^0
- Assumed normal reaction (N) and frictional force (μN) are concentrated at the midpoint of the shoe
- Not applicable for long shoe

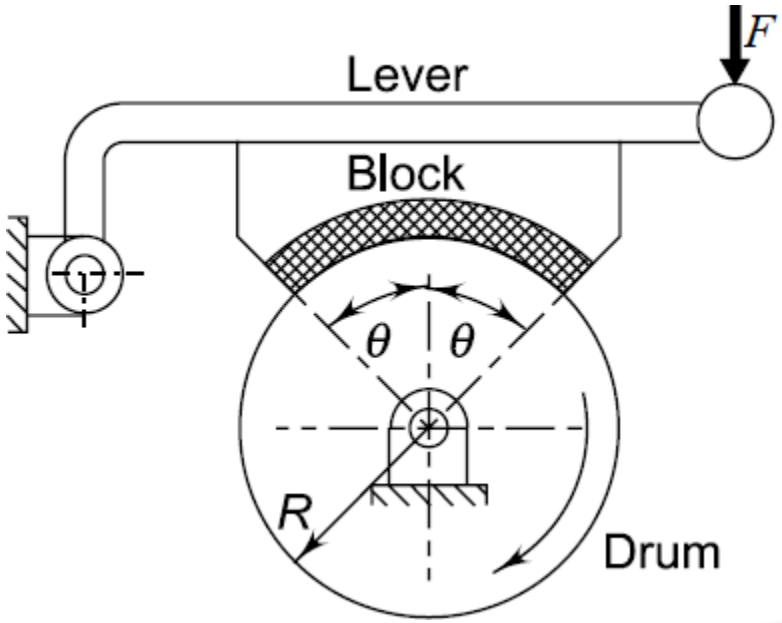

Block Brake: Long Shoe

Notations

- θ- Semi block angle
- dϕ- Element of friction lining
- ϕ –Location of friction lining element
- Rdϕw- Area of the element
- w- width of the friction lining parallel to the axis
- dN-Normal reaction on the element

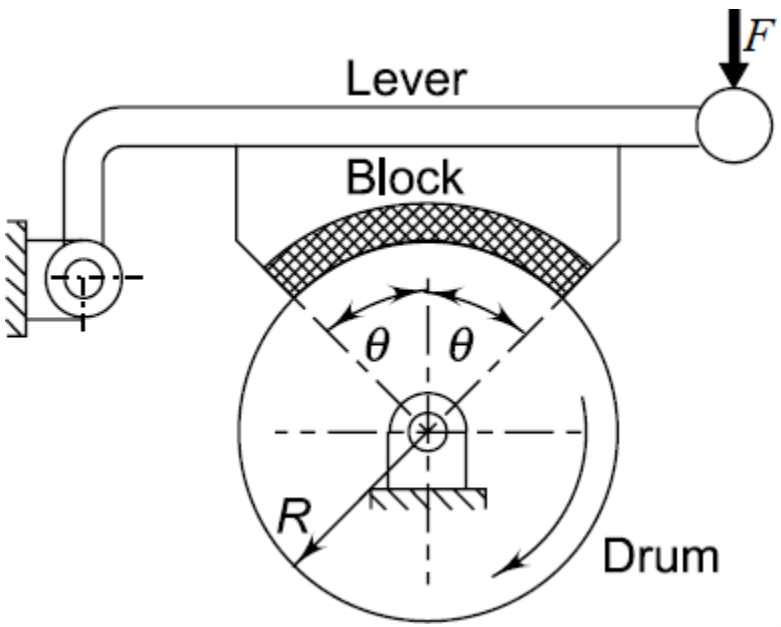

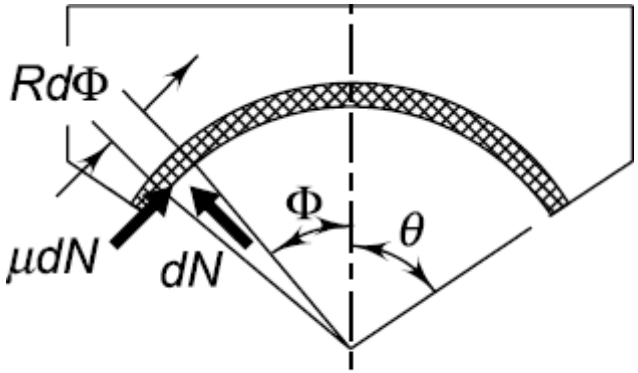

(a) Forces on lining

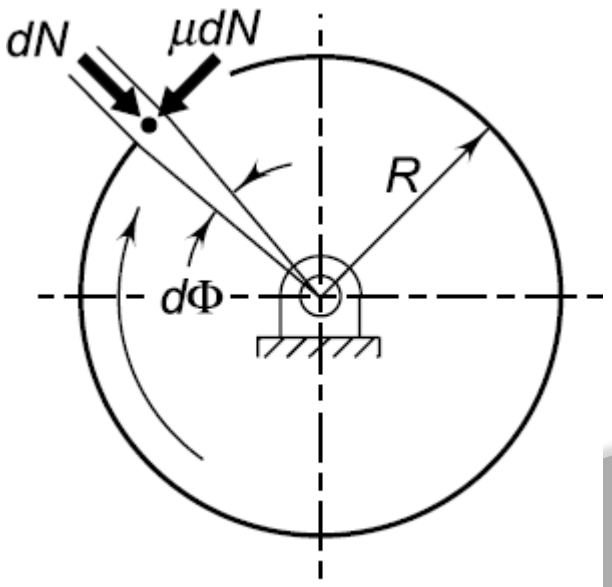

(b) Forces on drum

Block Brake: Long Shoe

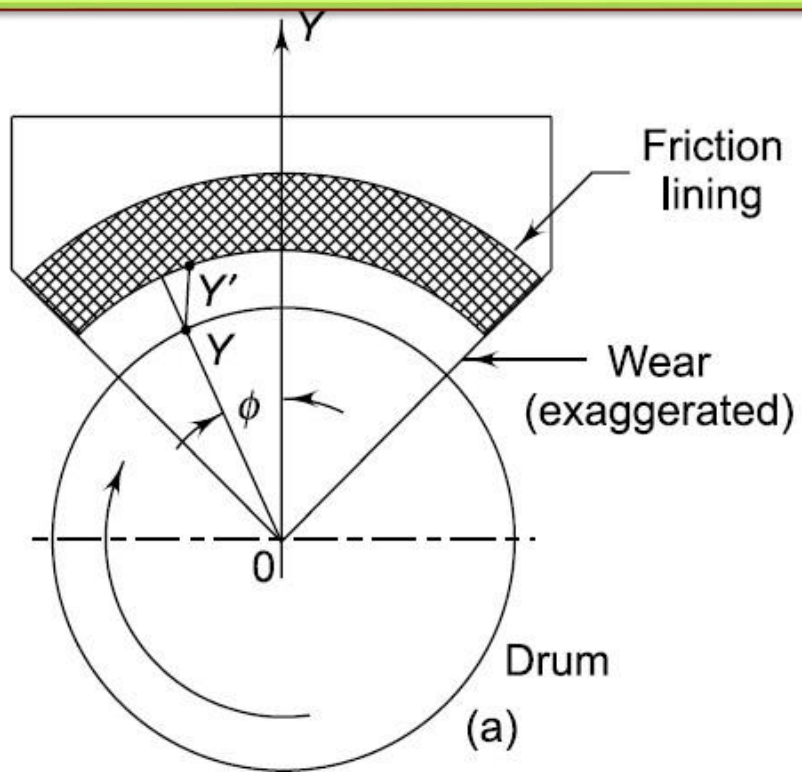

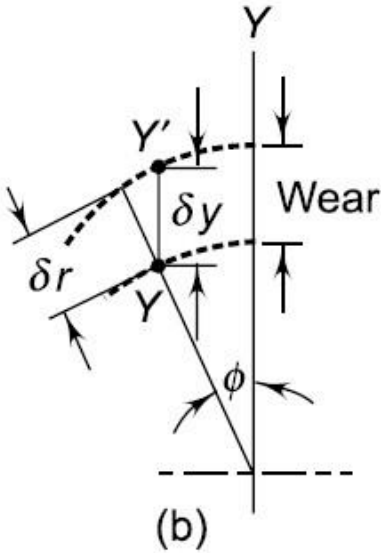

$$M_t = \mu N R \left(\frac{4 \ \sin\theta}{2\theta + \sin 2\theta} \right)$$

$$M_t = \mu F \frac{D}{2} \left(\frac{4 \ \sin\theta}{2\theta + \sin 2\theta} \right)$$

(Eqn 19-141)

Assumptions:

- Wear occurs at the brake shoe
- δy=wear in y direction (constant)
- δr= wear in radial direction

Block Brake: Pivoted Long Shoe

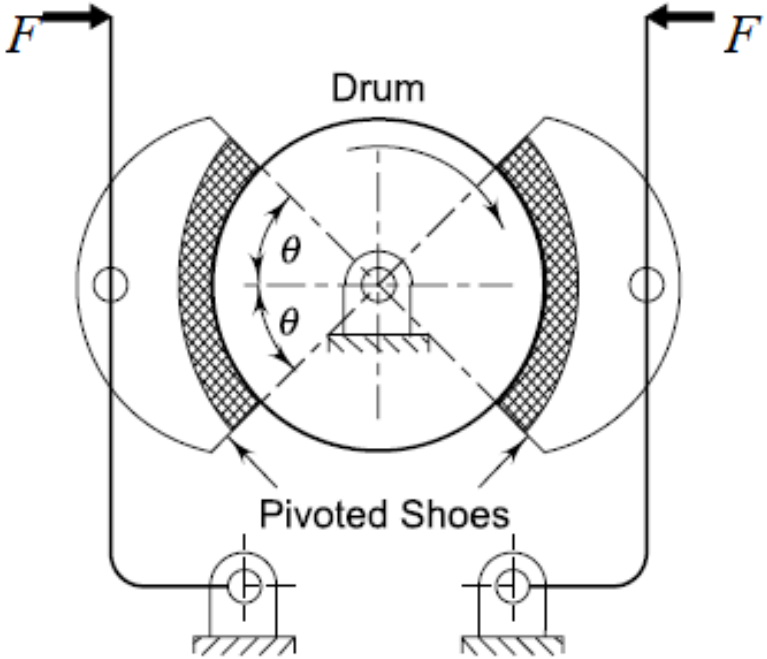

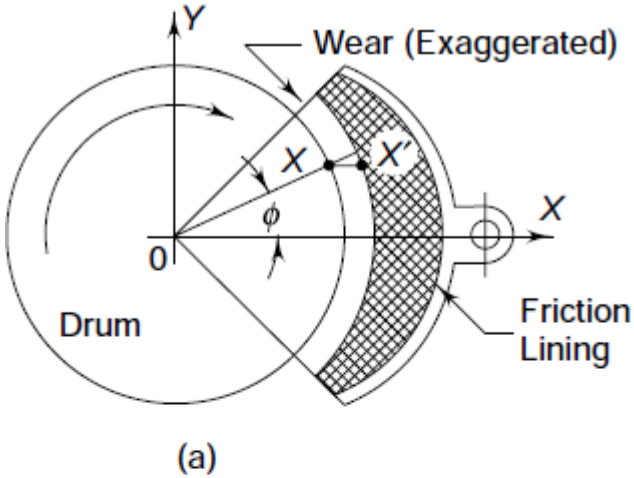

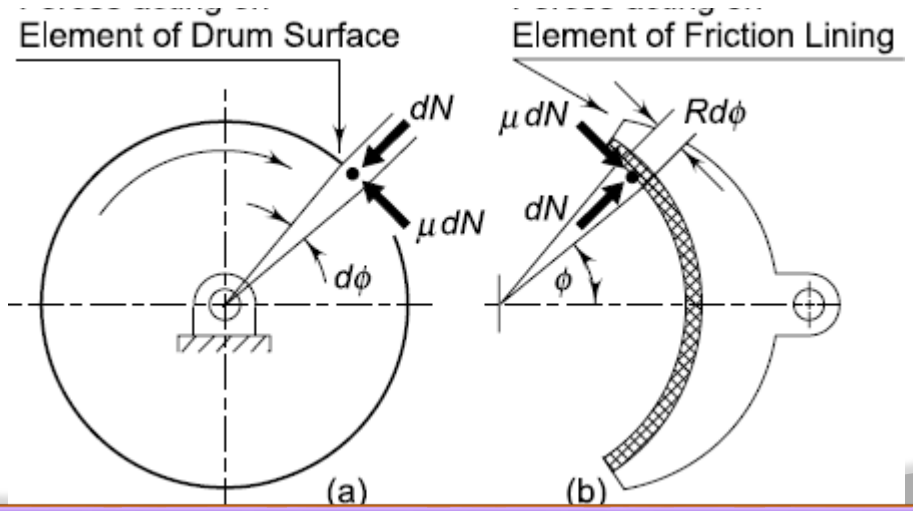

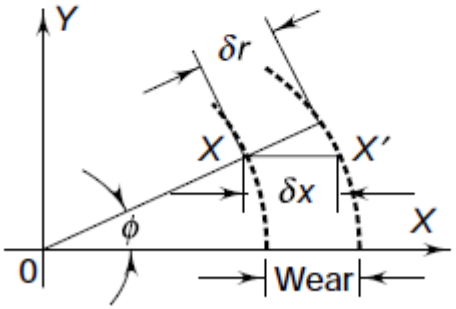

Pivoted Long Shoe: Force Diagram

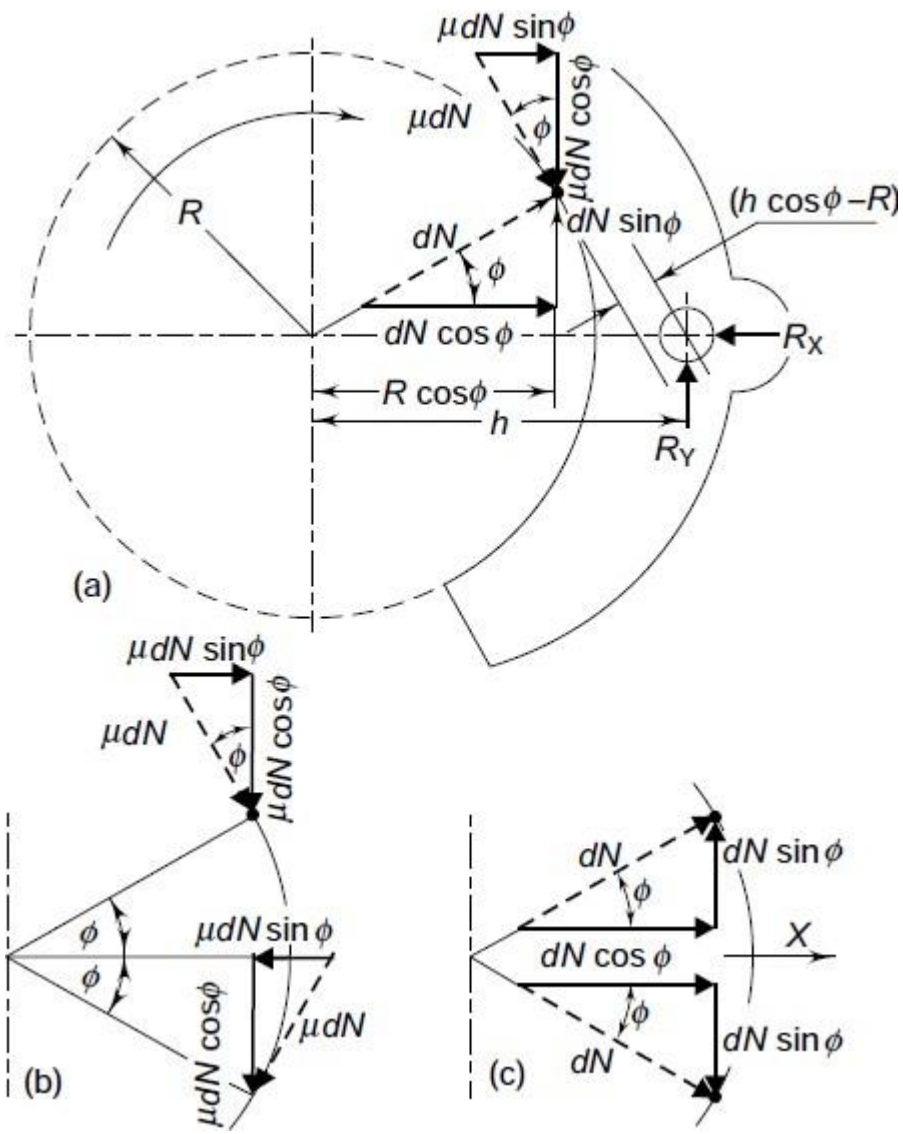

$$h = \frac{4R\sin\theta}{2\theta + \sin 2\theta}$$

$$M_t = 2\mu R^2 w p_{max} \sin\theta$$

$$R_x = \frac{1}{2} R w p_{max} (2\theta + \sin 2\theta)$$

$$R_y = \frac{1}{2} \mu R w p_{max} (2\theta + \sin 2\theta)$$

Problem

A pivoted double-block brake, similar to that in Figure has two shoes, which subtend an angle of 100^0. The diameter of the brake drum is 500 mm and the width of the friction lining is 100 mm. The coefficient of friction is 0.2 and the maximum intensity of pressure between the lining and the brake drum is 0.5 N/mm2. The pivot of each shoe is located in such a manner that the moment of the frictional force on the shoe is zero. Calculate:

- The distance of the pivot from the axis of the brake drum
- The torque capacity of each shoe
- The reactions at the pivot

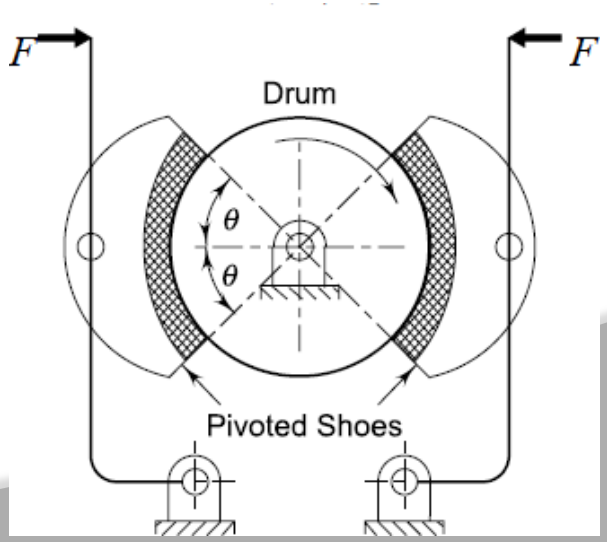

Internal Expanding Brake: Animation

Internal Expanding Brake

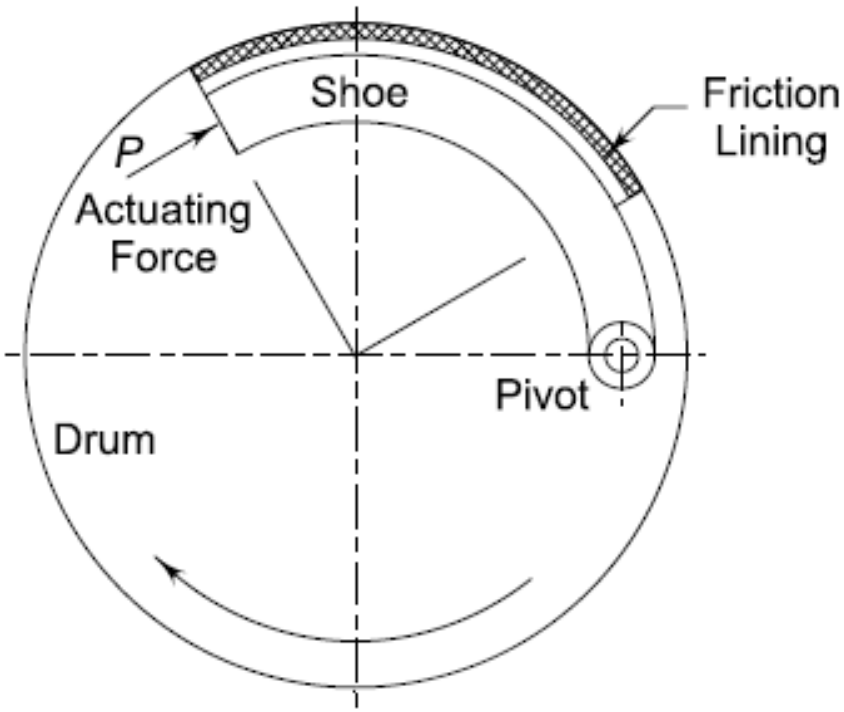

- A shoe pivoted at one end and subject to an actuating force
- Friction lining fixed on the shoe
- Complete assembly of shoe, lining and pivot is placed inside the brake drum
- Internal shoe brakes with two symmetrical shoes are used on all automobiles

Assumptions

- The intensity of normal pressure between the friction lining and the brake drum at any point is proportional to its vertical distance from the pivot
- The brake drum and shoes are rigid
- The centrifugal force acting on the shoe is negligible
- Coefficient of friction is constant

Internal Expanding Brake: Force Diagram

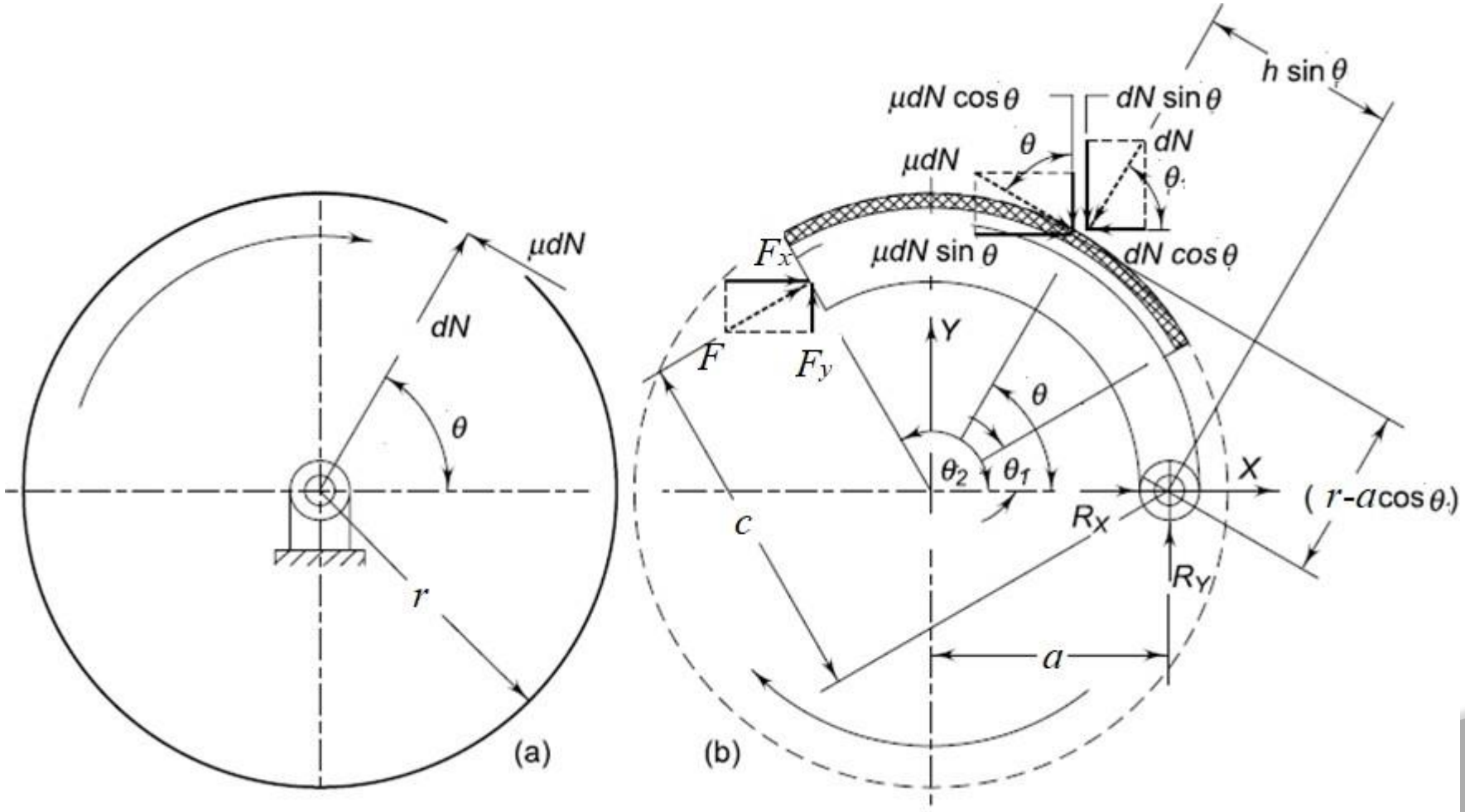

Forces acting on Drum

Forces acting on Shoe

Internal Expanding Brake: Final Equations

Moment due to friction force about pivot

Eqn 19-174a

$$M_t = \frac{\mu p_a r b}{\sin\theta_a} \int_{\theta_1}^{\theta_2} \sin\theta (r - a\cos\theta) d\theta = \frac{\mu p_a r b[4r(\cos\theta_1 - \cos\theta_2) - a(\cos 2\theta_1 - \cos 2\theta_2)]}{4\sin\theta_a}$$

Moment due to normal force about pivot

Eqn 19-175

$$M_{tn} = \frac{p_a r b a}{\sin\theta_a} \int_{\theta_1}^{\theta_2} \sin^2\theta \, d\theta = \frac{p_a r b a[2(\theta_2 - \theta_1) - (\sin 2\theta_2 - \sin 2\theta_1)]}{4\sin\theta_a}$$

Frictional torque

$$M_t = \frac{\mu r^2 p_a b(\cos\theta_1 - \cos\theta_2)}{\sin\theta_a}$$

Eqn 19-177

For the clockwise rotation of the brake drum

$$P/F = \frac{M_{tn} - M_{t\mu}}{c}$$

Eqn 19-176

For the anti- clockwise rotation of the brake drum

$$P/F = \frac{M_{tn} + M_{t\mu}}{c}$$

Eqn 19-180

Internal Expanding Brake: Force Diagram

For forward motion of the vehicle

$$P/F = \frac{M_{tn} - M_{t\mu}}{c}$$

For backward motion of the vehicle

$$P/F = \frac{M_{tn} + M_{t\mu}}{c}$$

Advantages

- Simple construction
- More reliable
- Little maintenance
- Small braking force can produce a large braking torque
- Protection against foreign particles

Disadvantages

- Relatively poor heat dissipating capacity
- Can become self locking due to wear if improperly designed

Problem

An internal expanding double shoe brake is shown in Figure. The face width of friction lining is 40 mm and the maximum intensity of normal pressure is limited to 1 N/mm^2. The coefficient of friction is 0.32. The angle θ_1 can be assumed to be zero. Calculate:

- The actuating force: F/P
- The torque absorbing capacity

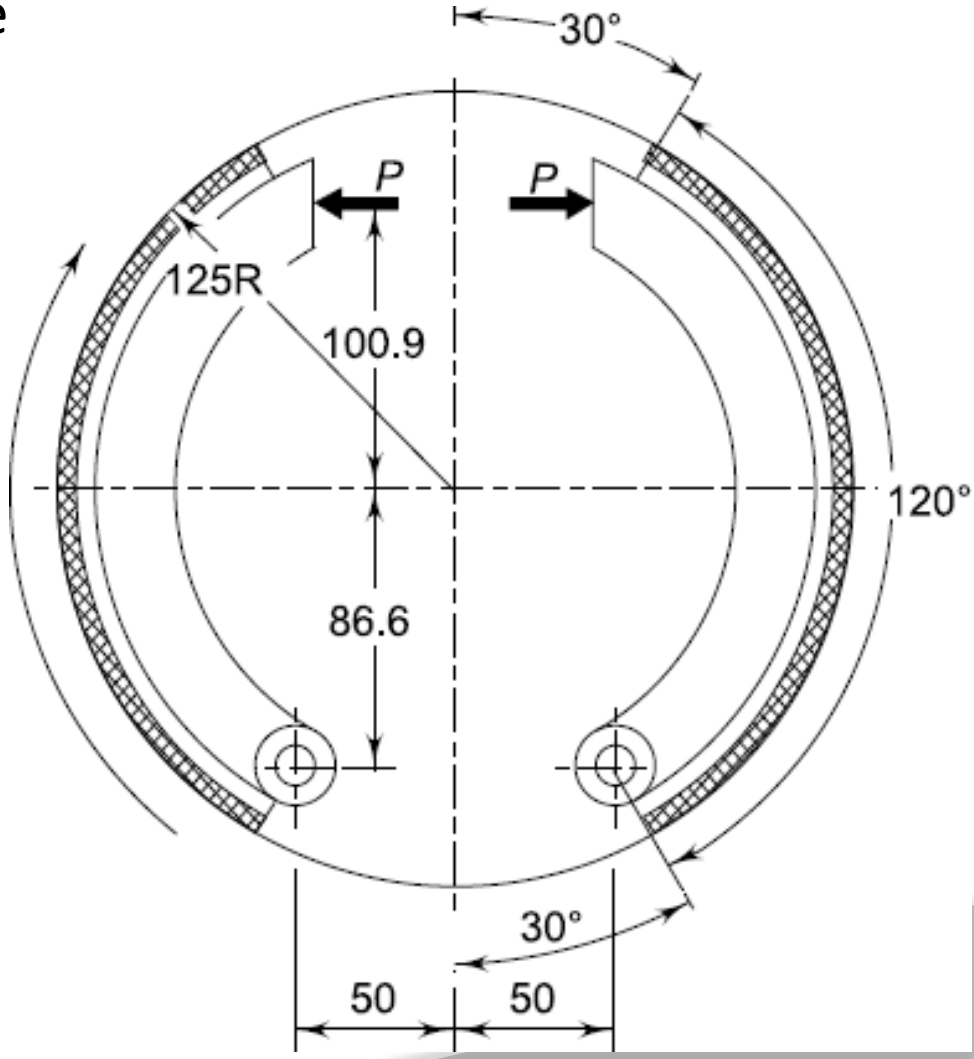

Problem

An internal expanding brake with four identical shoes is shown in Figure. The actuating hinge pin support a pair of shoes. The actuating mechanism is designed in such a way that it produces the same force P/F on each of the four shoes. The face width of the friction lining is 50 mm and the maximum intensity of normal pressure is limited to 1N/mm^2. The coefficient of friction is 0.30. Calculate:

- The actuating force
- The torque absorbing capacity of the brake

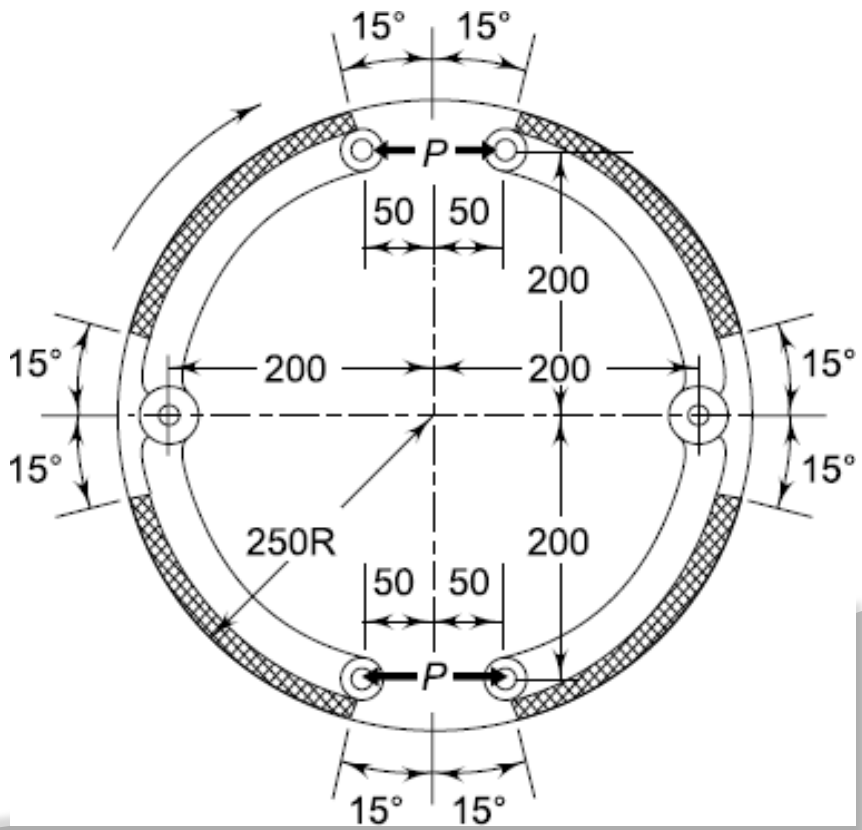

Simple Band Brakes

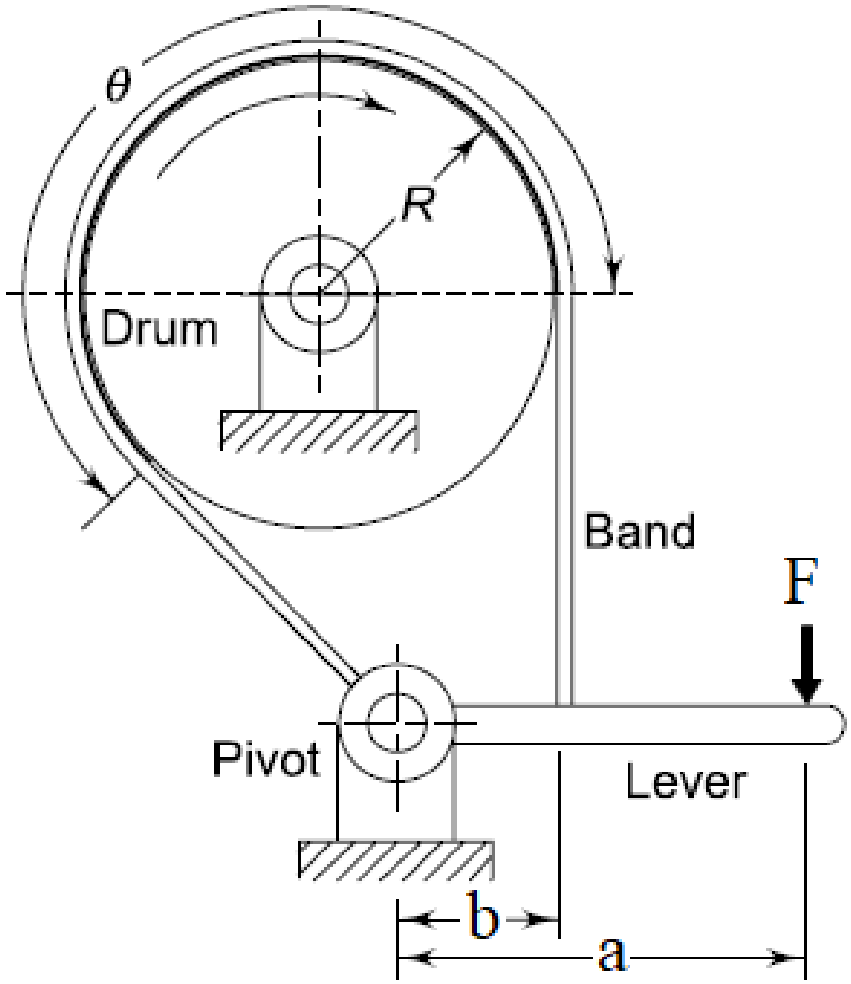

$F_1 = tension\ on\ tight\ side$

$F_2 = tension\ on\ loose\ side$

$\mu = coefficient\ of\ friction$

$\theta = ange\ of\ wrap$

The torque absorbing capacity

$$M_t = (F_1 - F_2)R$$

$$\frac{F_1}{F_2} = e^{\mu\theta}$$

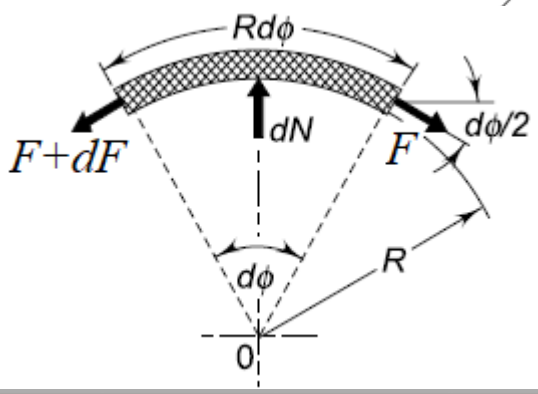

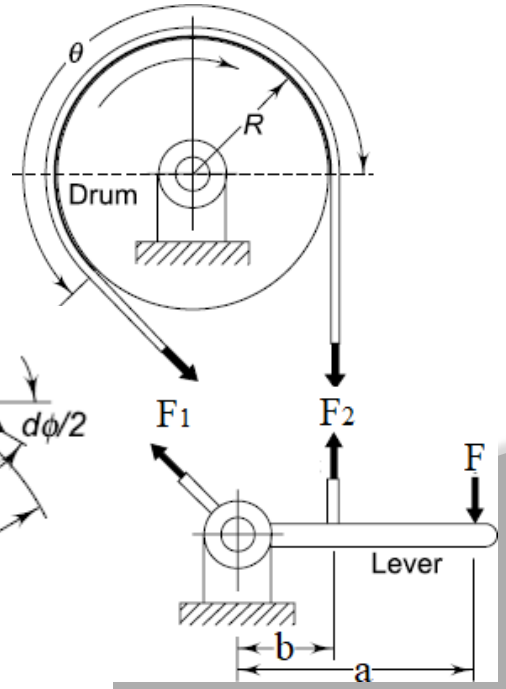

Differential Band Brakes

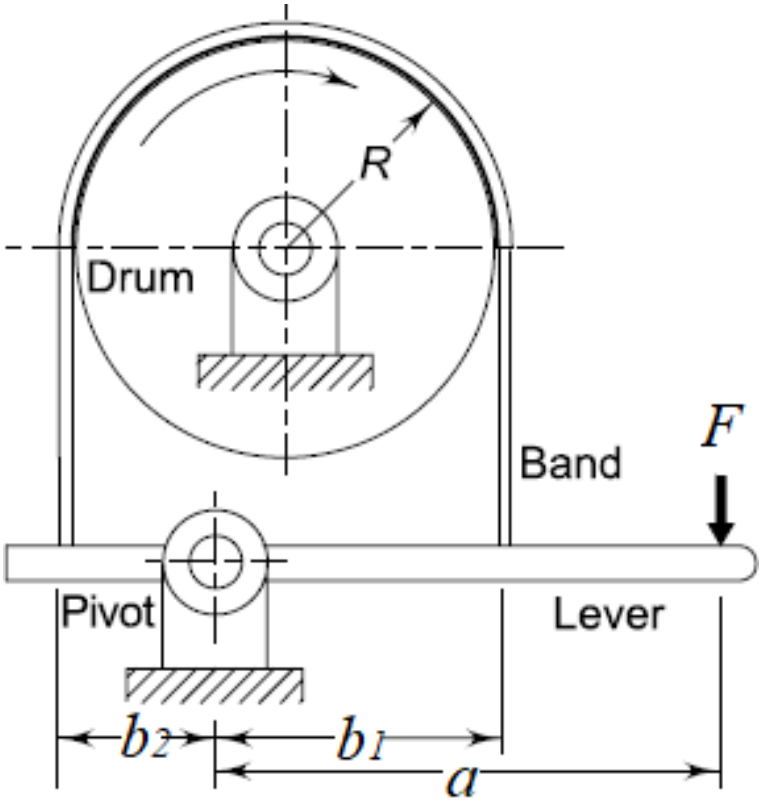

$$F_1 = tension\ on\ tight\ side$$
$$F_2 = tension\ on\ loose\ side$$
$$\mu = coefficient\ of\ friction$$
$$\theta = ange\ of\ wrap$$

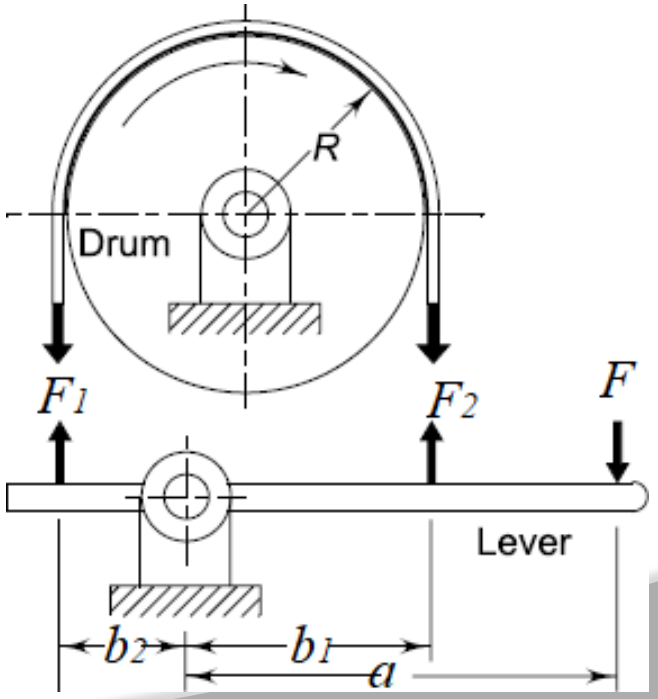

Problem

A differential band brake is shown in Figure. The width and the thickness of the steel band are 100 mm and 3 mm respectively and the maximum tensile stress in the band is 50 N/mm^2. The coefficient of friction between the friction lining and the brake drum is 0.25. Calculate:

- The tensions in the band
- The actuating force
- The torque capacity of the brake
- Find out whether the brake is self locking

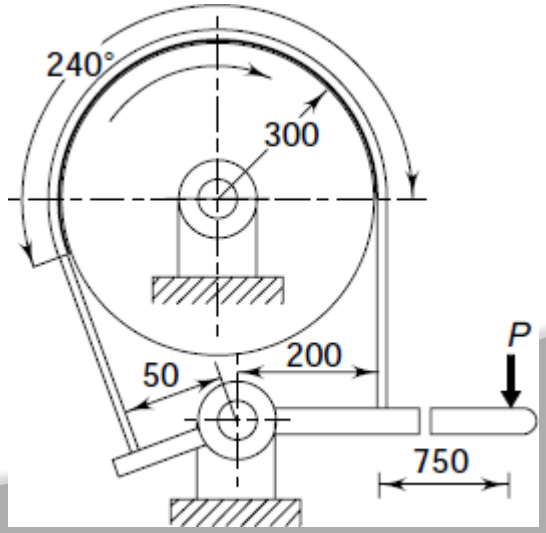

UNIT-V
Design of Bearings & Gears

Introduction

A bearing is a machine element which support another moving machine element (known as journal). It permits a relative motion between the contact surfaces of the members, while carrying the load.

Due to the relative motion between the contact surfaces, a certain amount of power is wasted in overcoming frictional resistance and if the rubbing surfaces are in direct contact, there will be rapid wear.

To reduce frictional resistance and wear and in some cases to carry away the heat generated, a layer of fluid (known as lubricant) may be provided.

The lubricant used to separate the journal and bearing is usually a mineral oil refined from petroleum, but vegetable oils, silicon oils, greases etc., may be used.

Classification of Bearings

1. Depending upon the direction of load to be supported.
   a) Radial bearings, and (b) Thrust bearings.

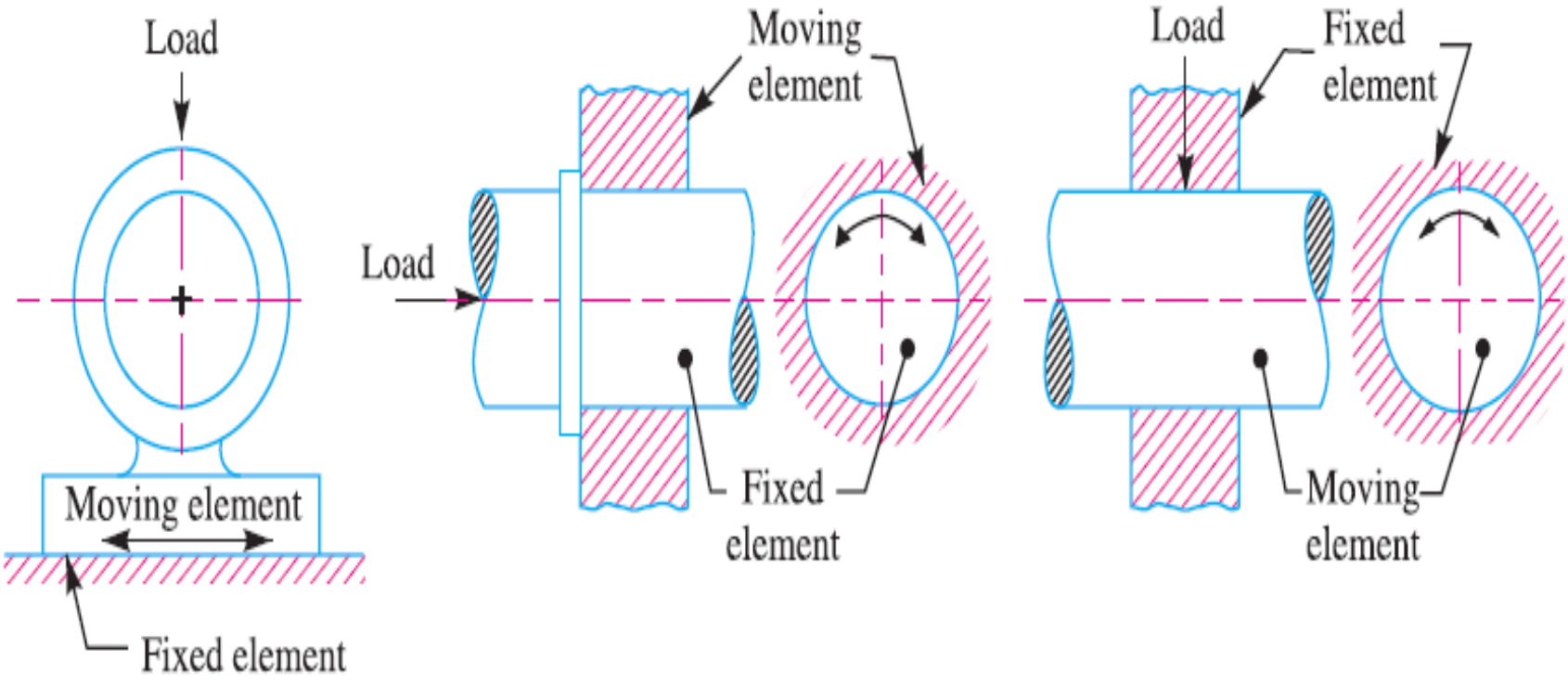

(*a*) Radial bearing. (*b*) Radial bearing. (*c*) Thrust bearing.

2. Depending upon the nature of contact.

(a) Sliding contact bearings, and (b) Rolling contact

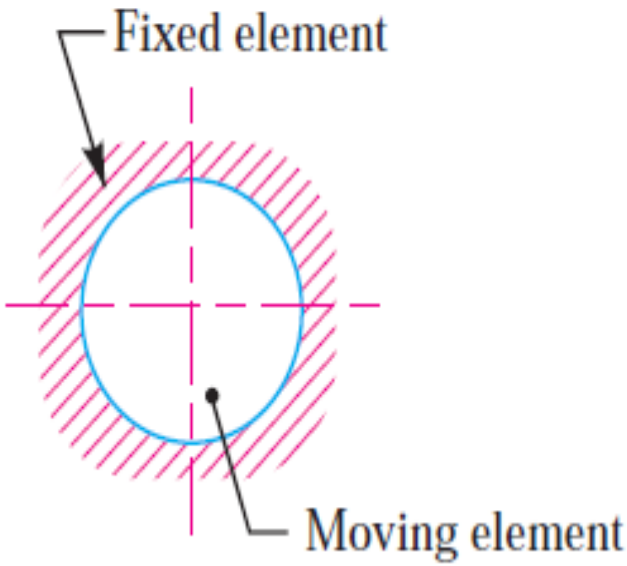

(*a*) Sliding contact bearing.

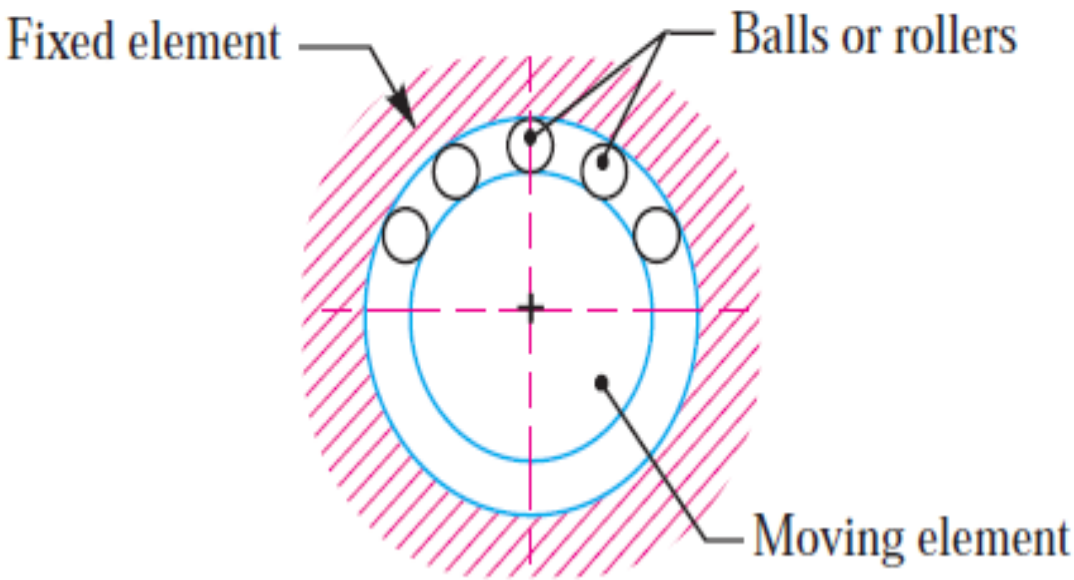

(*b*) Rolling contact bearings.

3. Types of Sliding Contact Bearings

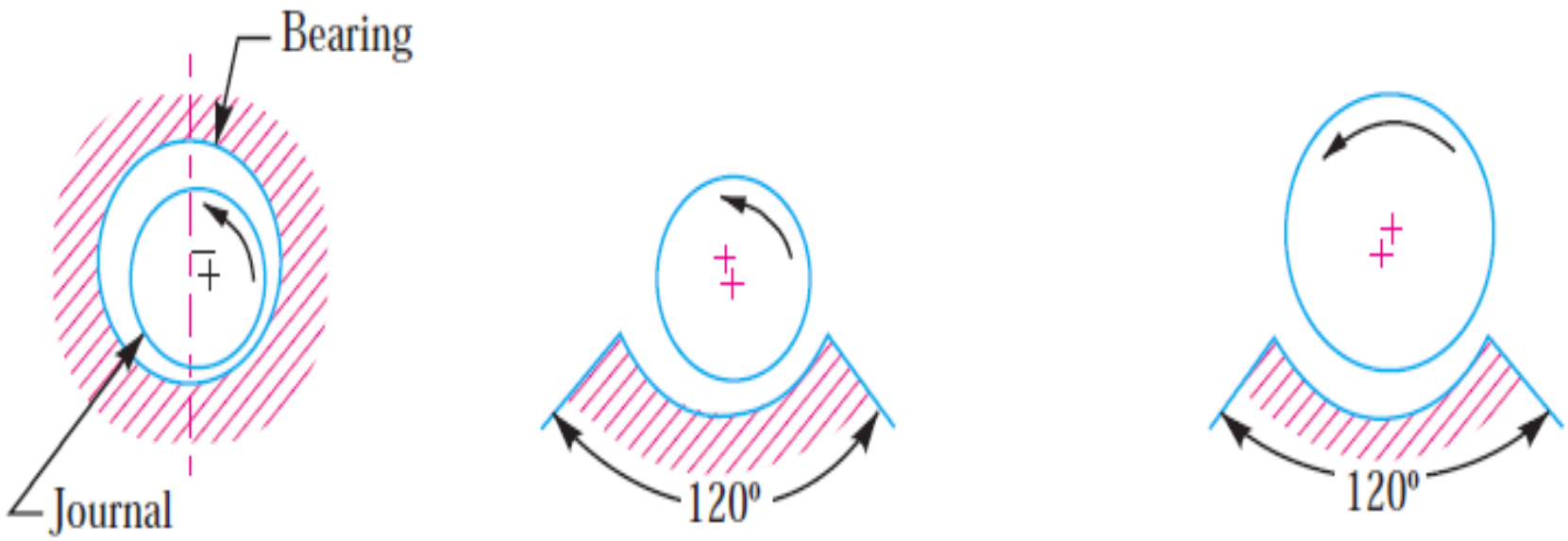

(*a*) Full journal bearing. (*b*) Partial journal bearing. (*c*) Fitted journal bearing.

4. The sliding contact bearings, according to the thickness of layer of the lubricant

1. Thick film bearings. The thick film bearings are those in which the working surfaces are completely separated from each other by the lubricant. Such type of bearings are also called as hydrodynamic lubricated bearings.
2. Thin film bearings. The thin film bearings are those in which, although lubricant is present, the working surfaces partially contact each other atleast part of the time. Such type of bearings are also called boundary lubricated bearings.
3. Zero film bearings. The zero film bearings are those which operate without any lubricant present.
4. Hydrostatic or externally pressurized lubricated bearings. The hydrostatic bearings are those which can support steady loads without any relative motion between the journal and the bearing. This is achieved by forcing externally pressurized lubricant between the members.

5.Working Mechanism: Wedge Action

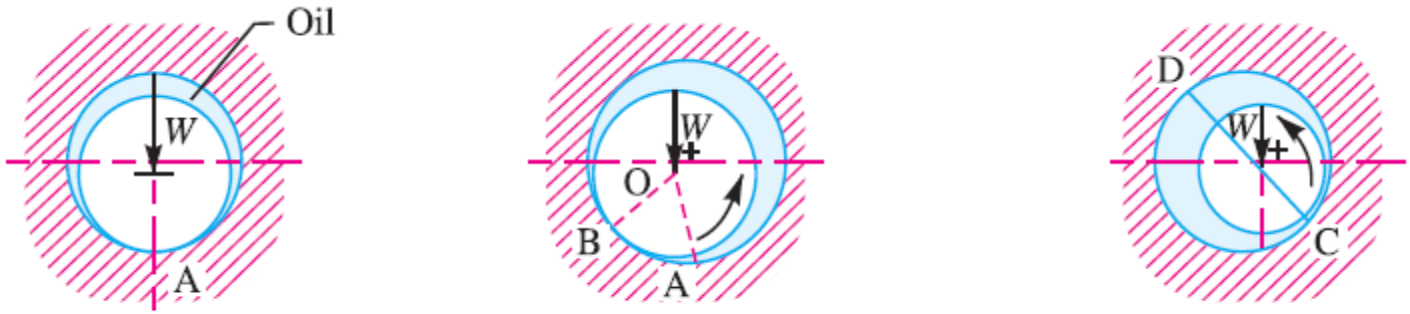

(*a*) At rest. (*b*) Slow speed. (*c*) High speed.

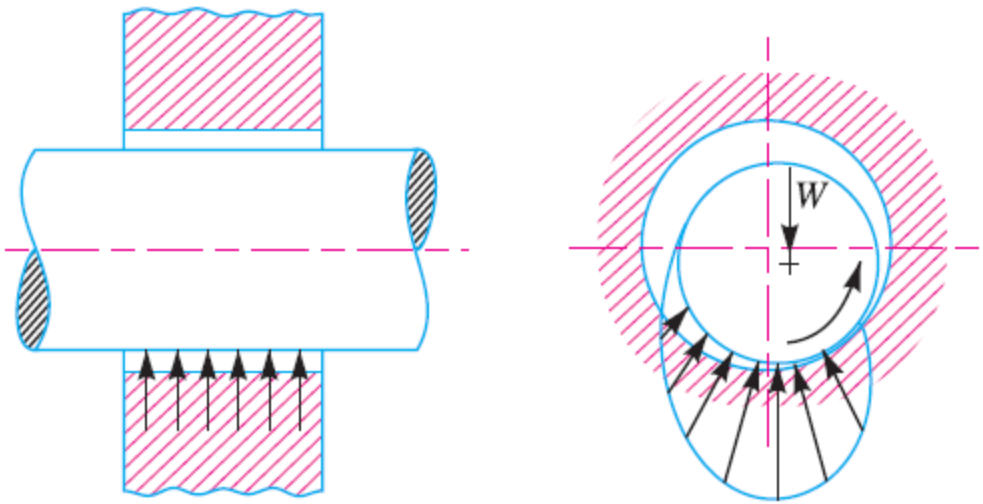

Wedge Action

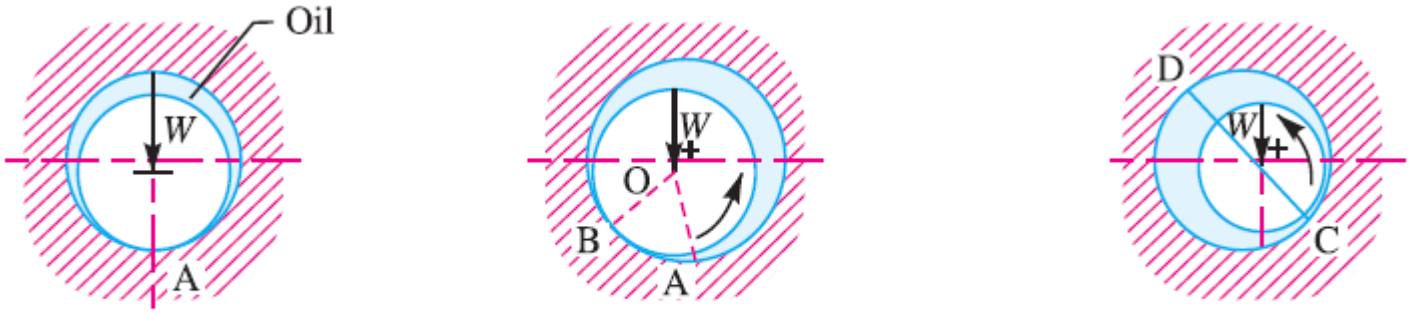

(*a*) At rest. (*b*) Slow speed. (*c*) High speed.

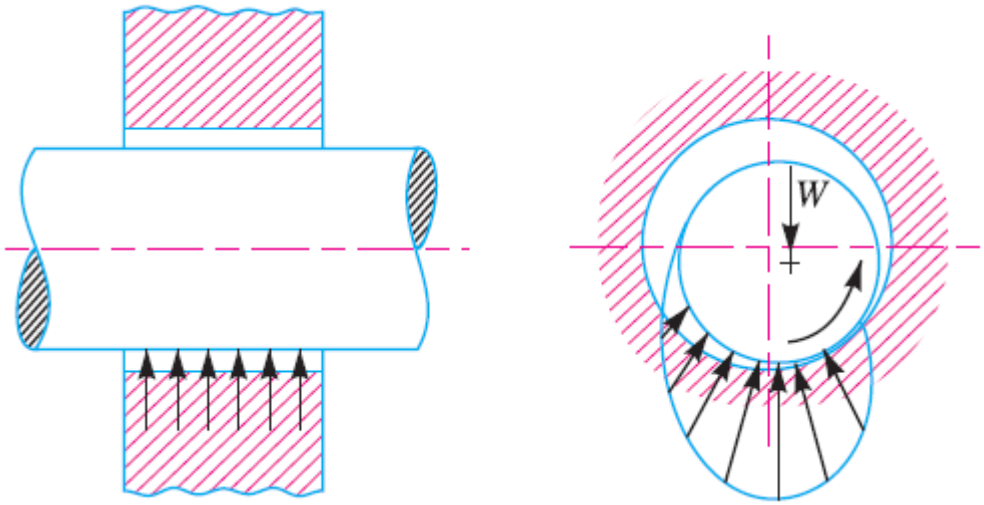

6. Properties of Sliding Contact Bearing Materials

1. **Compressive strength:** The maximum bearing pressure is considerably greater than the average pressure obtained by dividing the load to the projected area. Therefore the bearing material should have high compressive strength to withstand this maximum pressure so as to prevent extrusion or other permanent deformation of the bearing.
2. **Fatigue strength:** The bearing material should have sufficient fatigue strength so that it can withstand repeated loads without developing surface fatigue cracks. It is of major importance in aircraft and automotive engines.
3. **Comformability:** It is the ability of the bearing material to accommodate shaft deflections and bearing inaccuracies by plastic deformation (or creep) without excessive wear and heating.

Properties…..

4. Embeddability: It is the ability of bearing material to accommodate (or embed) small particles of dust, grit etc., without scoring the material of the journal.

5. Bondability: Many high capacity bearings are made by bonding one or more thin layers of a bearing material to a high strength steel shell. Thus, the strength of the bond i.e. bondability is an important consideration in selecting bearing material.

Properties…

6. *Corrosion resistance. The bearing material* should not corrode away under the action of lubricating oil. This property is of particular importance in internal combustion engines where the same oil is used to lubricate the cylinder walls and bearings. In the cylinder, the lubricating oil comes into contact with hot cylinder walls and may oxidise and collect carbon deposits from the walls.

7. *Thermal conductivity. The bearing material* should be of high thermal conductivity so as to permit the rapid removal of the heat generated by friction.

8. *Thermal expansion. The bearing material* should be of low coefficient of thermal expansion, so that when the bearing operates over a wide range of temperature, there is no undue change in the clearance.

Properties of metallic bearing materials.

Bearing material	*Fatigue strength*	*Comfor-mability*	*Embed-dability*	*Anti scoring*	*Corrosion resistance*	*Thermal conductivity*
Tin base babbit	Poor	Good	Excellent	Excellent	Excellent	Poor
Lead base babbit	Poor to fair	Good	Good	Good to excellent	Fair to good	Poor
Lead bronze	Fair	Poor	Poor	Poor	Good	Fair
Copper lead	Fair	Poor	Poor to fair	Poor to fair	Poor to fair	Fair to good
Aluminium	Good	Poor to fair	Poor	Good	Excellent	Fair
Silver	Excellent	Almost none	Poor	Poor	Excellent	Excellent
Silver lead deposited	Excellent	Excellent	Poor	Fair to good	Excellent	Excellent

7. Lubricants

The lubricants are used in bearings to reduce friction between the rubbing surfaces and to carry away the heat generated by friction. It also protects the bearing against corrosion.

All lubricants are classified into the following three groups :

1. **Liquid**: Minerals oil & Synthetic oil
2. **Semi-liquid :** Grease (heavy viscosity), use where high pressure and low velocity exist.
3. **Solid: Graphite's** are useful in reducing friction where oil films cannot be maintained because of pressures or temperatures.

8. Terms used in Hydrodynamic Journal Bearing:

A hydrodynamic journal bearing is shown in Fig, in which *O is the centre of the journal* and *O′ is the centre of the bearing.* Let *D = Diameter of the bearing,*

d = Diameter of the journal, and

l = Length of the bearing.

The following terms used in hydrodynamic journal bearing are important from the subject point of view :

Hydrodynamic journal bearing.

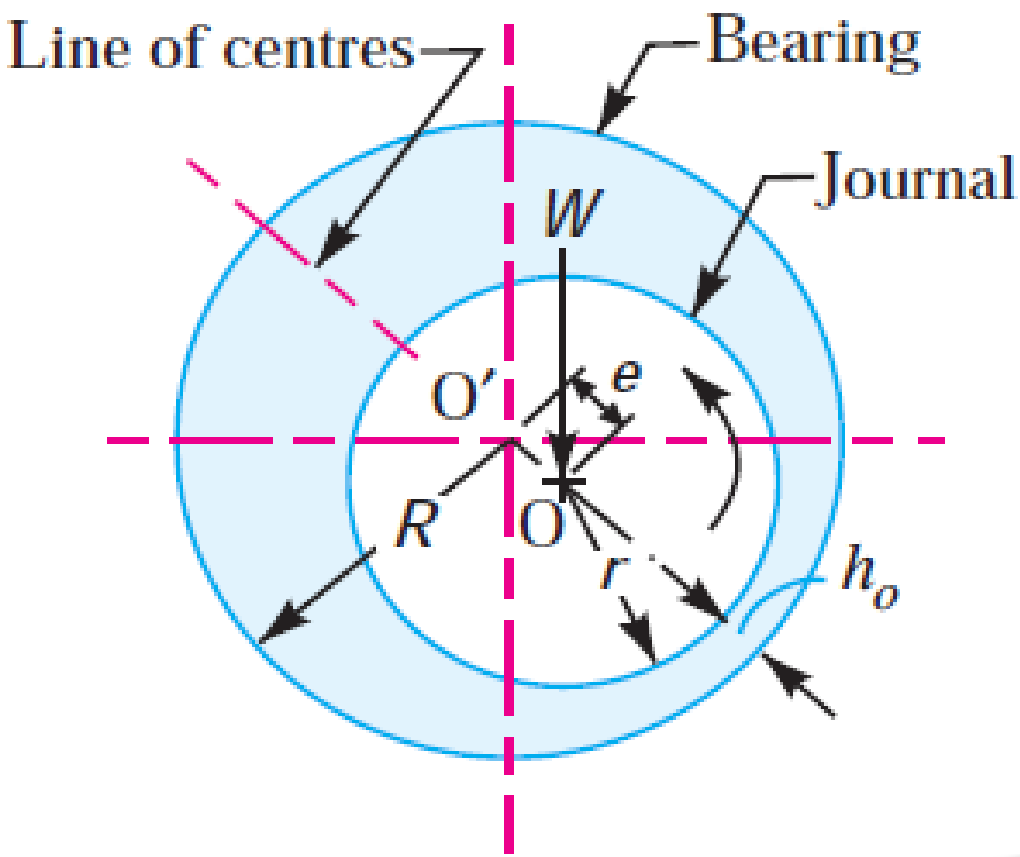

Terms....

1. ***Diametral clearance.*** It the difference between the diameters of the bearing and the journal. Mathematically, diametral clearance, $c = D - d$

2. ***Radial clearance.*** It is the difference between the radii of the bearing and the journal. Mathematically, radial clearance,

$$c_1 = R - r = \frac{D - d}{2} = \frac{c}{2}$$

3. **Diametral clearance ratio.** It is the ratio of the diametral clearance to the diameter of the journal. Mathematically, diametral clearance ratio

$$= \frac{c}{d} = \frac{D - d}{d}$$

Terms.....

4. Eccentricity. It is the radial distance between the centre (O) of the bearing and the displaced
centre (O') of the bearing under load. It is denoted by e.

5. Minimum oil film thickness. It is the minimum distance between the bearing and the journal, under complete lubrication condition. It is denoted by h0 and occurs at the line of centers as shown in Fig. Its value may be assumed as c / 4.

6. Attitude or eccentricity ratio. It is the ratio of the eccentricity to the radial clearance. Mathematically, attitude or eccentricity ratio,

$$\varepsilon = \frac{e}{c_1} = \frac{c_1 - h_0}{c_1} = 1 - \frac{h_0}{c_1} = 1 - \frac{2h_0}{c}$$

7. *Short and long bearing. If the ratio of the length to the* diameter of the journal (*i.e. l / d) is less than 1, then the bearing is* said to be **short bearing. On the other hand, if *l / d is greater than*** 1, then the bearing is known as ***long bearing.***

10. Design Procedure

1. **Determine the bearing length by choosing a ratio of** *l / d from DHB (page 315, table 15.11).*

   where l = length of journal (mm)

   d = diameter of journal (mm)

2. **Check the bearing pressure,** ***p = W / l.d from*** for probable satisfactory value. Its mean **p given> p calculated**.

   where W = Load on the bearing (N)

3. **Assume a lubricant from DHB (page 308, table 15.1) and its operating** temperature (t_o*). This temperature should be between* 26.5°C and 60°C with 82°C as a maximum for high temperature installations such as steam turbines.

Process……

4. Determine the operating value of bearing characteristic number OR Somerfield number K = (*ZN / p)* *(dimensionless number)* *for the* assumed bearing temperature and check this value with corresponding values in DHB, to determine the possibility of maintaining fluid film operation.

Z = Absolute viscosity of the lubricant, in kg / m-s,

N = Speed of the journal in r.p.m.,

p = Bearing pressure on the projected bearing area in N/mm2,

= Load on the journal ÷ *l × d*

Note that value of ***standard bearing*** **characteristic number (*ZN / p) , from (DHB PAGE 315, table no 15.11) should be more than calculated value.***

In above we have to put bearing pressure calculated in the formula.

Process.....

5. Assume a clearance ratio *c / d from* ***DHB page 315 , table 15.11.***

6. Determine the coefficient of friction (μ) by using the relation

$$\mu = \frac{33}{10^8}\left(\frac{ZN}{p}\right)\left(\frac{d}{c}\right) + k$$

(when Z is in kg / m-s and *p is in N / mm*^{2}*)*

k = Factor to correct for enc ... *upon the ratio of length* to the diar ... *d).*

= 0.002 for *l / d ratios of 0.75 to 2.8. from (**DHB page no: 317, graph no 15.4.)***

Variation of coefficient of friction with *ZN/p*

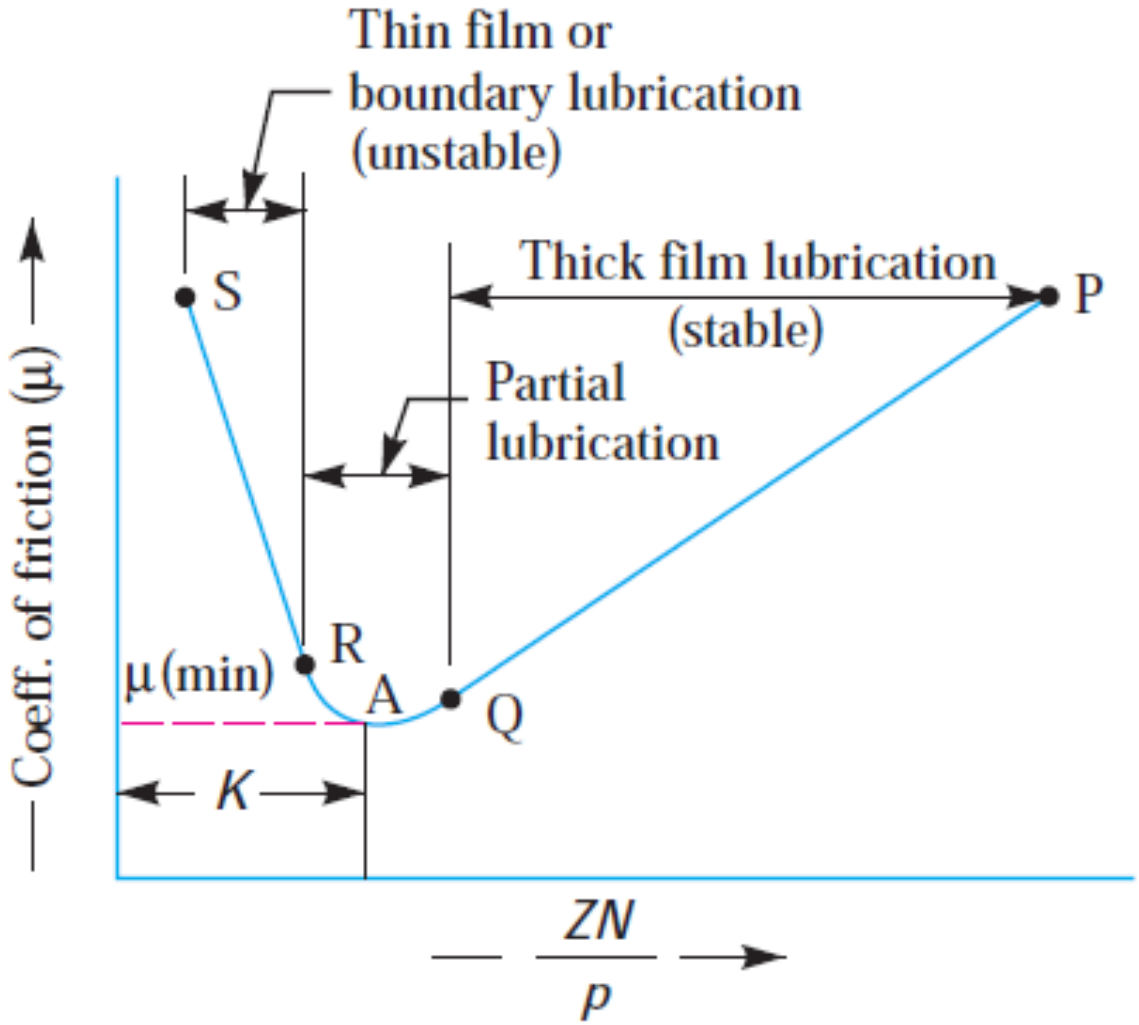

Process.....

7. **The heat generated** in a bearing is due to the fluid friction and friction of the parts having relative motion. Mathematically, heat generated in a bearing,

$$Qg = \mu.W.V \qquad \text{(N-m/s or J/s or watts)}$$

where μ = Coefficient of friction,

W = Load on the bearing in N,

= Pressure on the bearing in (N/mm^2) × Projected area of the bearing in mm^2 = *p (l × d),*

V = Rubbing velocity in m/s

N = Speed of the journal in r.p.m.

$$= \frac{\pi d.N}{60}$$

Process…

8. **Determine the heat dissipated** by the bearing,

Qd = C.A (t_b - t_a***)*** ***(J/s or W)*** *(Q 1 J/s = 1 W)*

where C = Heat dissipation coefficient in $W/m^2/°C$,

A = Projected area of the bearing in $m^2 = l \times d$,

t_b = Temperature of the bearing surface in °C,

t_a= Temperature of the surrounding air in °C.

It has been shown by experiments that the temperature of the bearing (t_b*) is approximately* mid-way between the temperature of the oil film (t_o *) and the temperature of the outside air (*t_a*).*

$$t_b - t_a = \frac{1}{2}(t_0 - t_a)$$

Process….

9. Determine the thermal equilibrium to see that the heat dissipated becomes at least equal to the heat generated. In case the heat generated is more than the heat dissipated then either the bearing is redesigned or it is artificially cooled by water.

$$Q_t = m.S.t \qquad \text{(J/s or watts)}$$

where *m = Mass of the oil in kg / s,*

S = Specific heat of the oil. Its value may be taken as 1840 to 2100 J / kg / °C,

t = Difference between outlet and inlet temperature of the oil in °C.

Selection of Antifriction/Rolling Contact Bearing

In rolling contact bearings, the contact between the bearing surfaces is rolling instead of sliding as in sliding contact bearings.

The ordinary sliding bearing starts from rest with practically metal-to-metal contact and has a high coefficient of friction. It is an outstanding advantage of a rolling contact bearing over a sliding bearing that it has a low starting friction.

Due to this low friction offered by rolling contact bearings, these are called *antifriction bearings.*

Types of Rolling Contact Bearings

1. Ball bearings; and 2. Roller bearings.

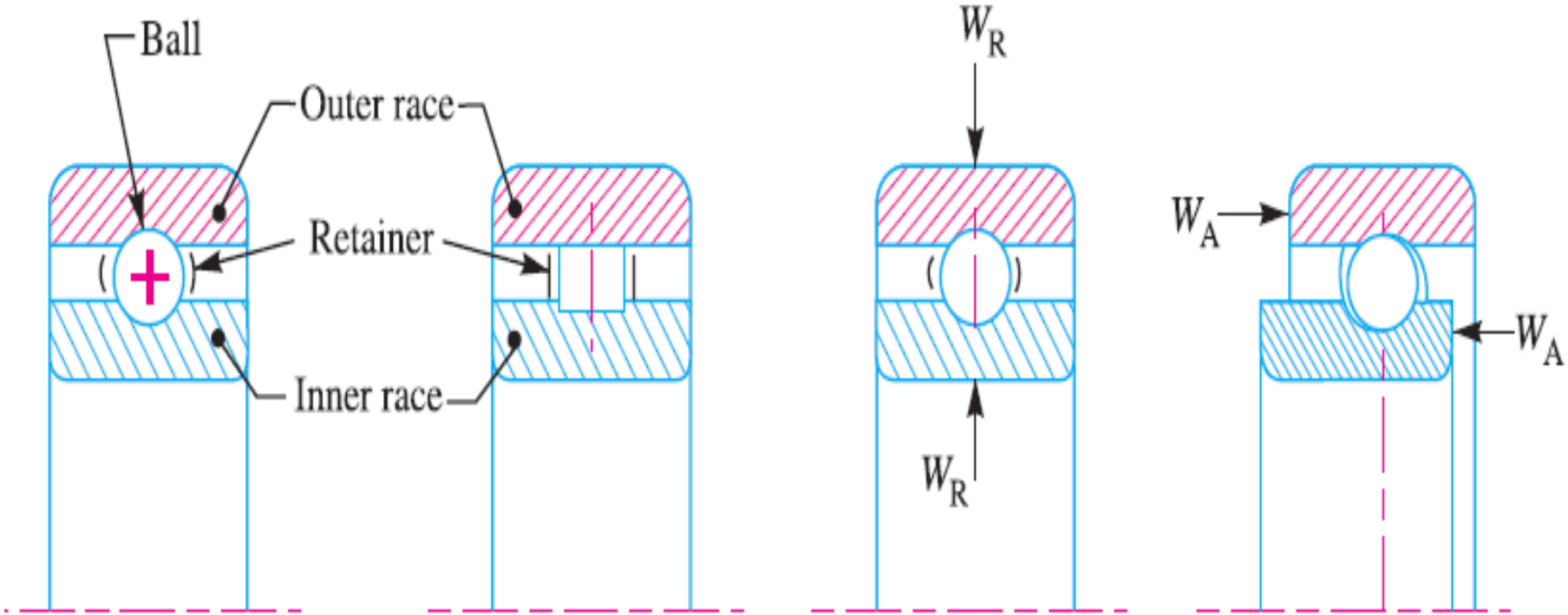

(*a*) Ball bearing. (*b*) Roller bearing. (*a*) Radial ball bearing. (*b*) Thrust ball bearing.

Materials and Manufacture of Ball and Roller Bearings

Since the rolling elements and the races are subjected to high local stresses of varying magnitude with each revolution of the bearing, therefore the material of the rolling element (*i.e. steel) should be* of high quality.

The balls are generally made of high carbon chromium steel. The material of both the balls and races are heat treated to give extra hardness and toughness.

The balls are manufactured by hot forging on hammers from steel rods. They are then heat treated, ground and polished. The races are also formed by forging and then heat-treated, ground and polished.

Lubrication of Ball and Roller Bearings

The ball and roller bearings are lubricated for the following purposes :

1. To reduce friction and wear between the sliding parts of the bearing,
2. To prevent rusting or corrosion of the bearing surfaces,
3. To protect the bearing surfaces from water, dirt etc., and
4. To dissipate the heat.

Lubricants used

In general, oil or light grease is used for lubricating ball and roller bearings. Only pure mineral oil or a calcium-base grease should be used. If there is a possibility of moisture contact, then potassium or sodium-base greases may be used.

Advantage of the grease is that it forms a seal to keep out dirt or any other foreign substance.

Excess use of oil or grease cause the temperature of the bearing to rise due to churning. The temperature should be kept below 90°C and in no case a bearing should operate above 150°C.

Static Load Rating of Rolling Contact Bearings

The load carried by a non-rotating bearing is called a static load. The ***basic static load rating is*** defined as the static radial load (in case of radial ball or roller bearings) or axial load (in case of thrust ball or roller bearings) which corresponds to a total permanent deformation of the ball (or roller) and race, at the most heavily stressed contact, equal to 0.0001 times the ball (or roller) diameter.

Static Equivalent Load for Rolling Contact Bearings

The static equivalent load may be defined as the static radial load (in case of radial ball or roller bearings) or axial load (in case of thrust ball or roller bearings) which, if applied, would cause the same total permanent deformation at the most heavily stressed ball (or roller) and race contact as that which occurs under the actual conditions of loading.

$W_{0R} = X_0 . W_R + Y_0 . W_A$ *; and 2.* $W_{0R} = W_R$ *…….DHB 16.13 page 328*

where W_R *= Radial load,*

W_A *= Axial or thrust load,*

X_0 *= Radial load factor, and*

Y_0 *= Axial or thrust load factor.*

According to IS : 3824 - 1984, the values of X_0 *and* Y_0 *for different bearings are given in the DHB Table 16.3 page 335*

Dynamic Load Rating of Rolling Contact Bearings

The basic dynamic load rating is defined as the constant stationary radial load (in case of radial ball or roller bearings) or constant axial load (in case of thrust ball or roller bearings) which a group of apparently identical bearings with stationary outer ring can endure for a rating life of one million revolutions (which is equivalent to 500 hours of operation at 33.3 r.p.m.) with only 10 percent failure.

Dynamic Equivalent Load for Rolling Contact Bearings

The dynamic equivalent load may be defined as the constant stationary radial load (in case of radial ball or roller bearings) or axial load (in case of thrust ball or roller bearings) which, if applied to a bearing with rotating inner ring and stationary outer ring, would give the same life as that which the bearing will attain under the actual conditions of load and rotation.

.....

The dynamic equivalent radial load (*W) for radial and angular contact bearings, except the* filling slot types, under combined constant radial load (*WR) and constant axial or thrust load (WA) is* given by

$$W = X \cdot V \cdot W_R + Y \cdot W_A$$ .....***DHB eq 16.6 page 326***

where *V = A rotation factor,*

= 1, for all types of bearings when the inner race is rotating,

= 1, for self-aligning bearings when inner race is stationary,

= 1.2, for all types of bearings except self-aligning, when inner race is stationary.

The values of radial load factor (*X) and axial or thrust load factor (Y) for the dynamically* loaded bearings may be taken from the ***DHB Table 16.3 page 335.***

Selection Process of Anti-friction Bearings

Step-1 Calculate the radial load and axial loads acting on the bearing and determine the diameter of the shaft where the bearing is to be fitted.
Step-2 Select the type of bearing for the given application.
Step-3 Determine the values of X and Y, the radial and thrust factors, from the DHB. The values of X and Y for different types of bearings are given in DHB.
Step-4 Calculate the equivalent dynamic load from the equation $W = X \cdot V \cdot W_R + Y \cdot W_A$
Step-5 Make a decision about the expected bearing life and express the life L in million revolutions.
Step-6 Calculate the dynamic load capacity from the equation

$$C = P\,(L^{1/3})$$

Step-7 Check whether the selected bearing of light series has the required dynamic capacity. If not, select the bearing of the next series and go back to Step 3 and continue.

Spur Gear Design

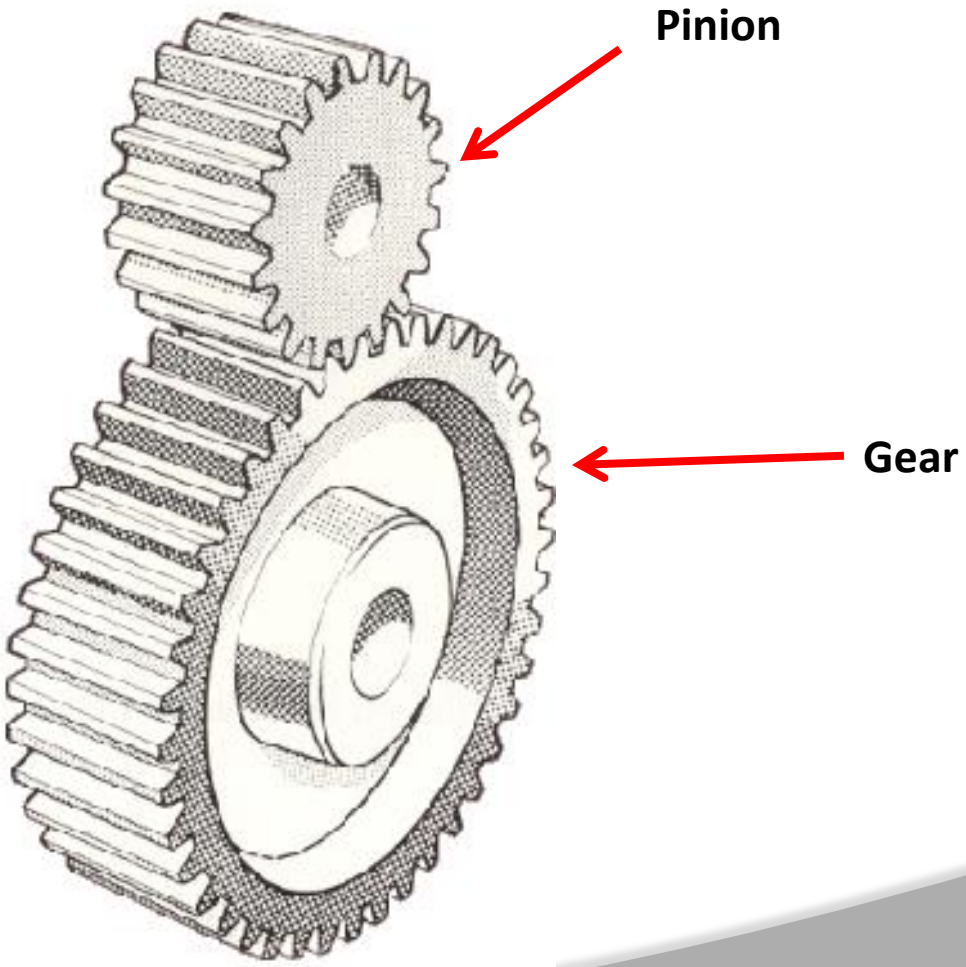

Lecture Steps:

1. Quick review, gear geometry (Chapter 8)
2. Transmitted loads (overhead)
3. Review bending stress, bending stress number, St, allowable bending stress number, Sat and adjusted allowable bending stress number, S'at.
4. Review contact stress number, Sc, allowable contact stress number, Sac and adjusted allowable contact stress number S'ac.
5. Overview gear design steps.
6. Example(s) gear design!!

handout

Quick review:

Bending Stress No:

$$S_t = \left(\frac{(W_t)(P_d)}{(F)(J_p)}\right)(K_o K_s K_m K_B K_v)$$

Required Allowable Bending Stress No:

$$(S_{at}) = \frac{S_F \times K_R}{Y_{NP}} \times S_t$$

Contact Stress No:

$$S_c = C_p \sqrt{\left(\frac{W_t \times K_o \times K_s \times K_m \times K_v}{F \times D_p \times I}\right)}$$

Required Allowable Contact Stress No:

$$(S_{ac}) = \frac{K_R \times S_F}{Z_{NP}} \times S_c$$

Steps for Gear Drive Design:

1. From design requirements, identify speed of pinion, n_P, desired output speed of gear, n_G, and power to be transmitted, P.
2. Choose type of material for the gears (steel, cast iron, bronze, etc.)
3. Determine overload factor, Ko, using table 9-5
4. Calculated $P_{des} = K_o P$ and calculate a trial value for the diametral pitch, P_d (for steel use Figure 9-27). Note diametral pitch must be a standard size (see Table 8-2).

Note, as P_d decreases, tooth size increases thus bringing down St and Sc. But….. As P_d increases, # teeth increases and gear train runs smoother and quiter and the drive gets smaller as well!

Steps for Gear Drive Design:

6. Specify N_p and N_G to meet VR requirement. Calculate center distance, D, OD to make sure there aren't any interference issues.
7. Specify face width using recommended range: 8/Pd < F < 16/Pd.

   Remember, increasing face width reduces St and Sc but consider alignment factor. Face width is normally less than 2X Dp.

7. Compute transmitted load, Wt, pitch line speed, vt, quality number, Qv, and other factors required for calculating bending stress and contact stress.
8. Calculate St and required Sat. Does material in 2 meet Sat #? No – then select new material or define new geometry (step 4). If yes, continue to 9.
9. Calculate Sc and required Sac. Does material in 2 meet Sac? No – then select new material to meet Sac and Sat or define new geometry (step 4). If yes, continue to 10.
10. Summarize design

Problem

A gear pair is to be a part of the drive for a milling machine requiring 20 hp with the pinion speed at 550 rpm and the gear speed to be between 180 and 190 rpm.

Given:

Driven = Milling Machine
Power = 20 hp
Pinion Speed = 550 rpm
Output Speed = 180 -190 rpm ≈ 185 rpm
Continuous Use = 30,000 hours

Find:

Compact Gear Design

TABLE 9–7 Recommended design life

Application	Design life (h)
Domestic appliances	1000–2000
Aircraft engines	1000–4000
Automotive	1500–5000
Agricultural equipment	3000–6000
Elevators, industrial fans, multipurpose gearing	8000–15 000
Electric motors, industrial blowers, general industrial machines	20 000–30 000
Pumps and compressors	40 000–60 000
Critical equipment in continuous 24-h operation	100 000–200 000

Source: Eugene A. Avallone and Theodore Baumeister III, eds. *Marks' Standard Handbook for Mechanical Engineers.* 9th ed. New York: McGraw-Hill, 1986.

Solution:

Design Power:

Assume: Light Shock Driver and Moderate Shock Driven
Ko = 1.75 (*Table 9-5, page 389*)

$P_{Design} = (Ko)(P_{Input})$
$= (1.75)(20hp)$
$= 35hp$

TABLE 9–5 Suggested overload factors, K_o

	Driven Machine			
Power source	Uniform	Light shock	Moderate shock	Heavy shock
Uniform	1.00	1.25	1.50	1.75
Light shock	1.20	1.40	1.75	2.25
Moderate shock	1.30	1.70	2.00	2.75

Trial Size

Pick Sizes

Pd = 5 T/in
Dp = 4.80 in
DG = 14.2 in
Np = 24 teeth
NG = 71 teeth

$P_d = 5, D_p = 4.80$ in

Figure 9-27, Page 409

$$Np = Pd \times Dp = (5)(4.80) = 24 Teeth$$

$$VR = \frac{550rpm}{185rpm} = 2.97$$

$$N_G = (24Teeth)(2.97) = 71.28Teeth$$

Try $N_G = 71$ Teeth

$$n_G = (500rpm)\left(\frac{24}{71}\right) = 185.9rpm$$

Okay, between 180 – 190 rpm

$$D_G = \left(\frac{N_G}{P_d}\right) = \left(\frac{71}{5}\right) = 14.2\ in$$

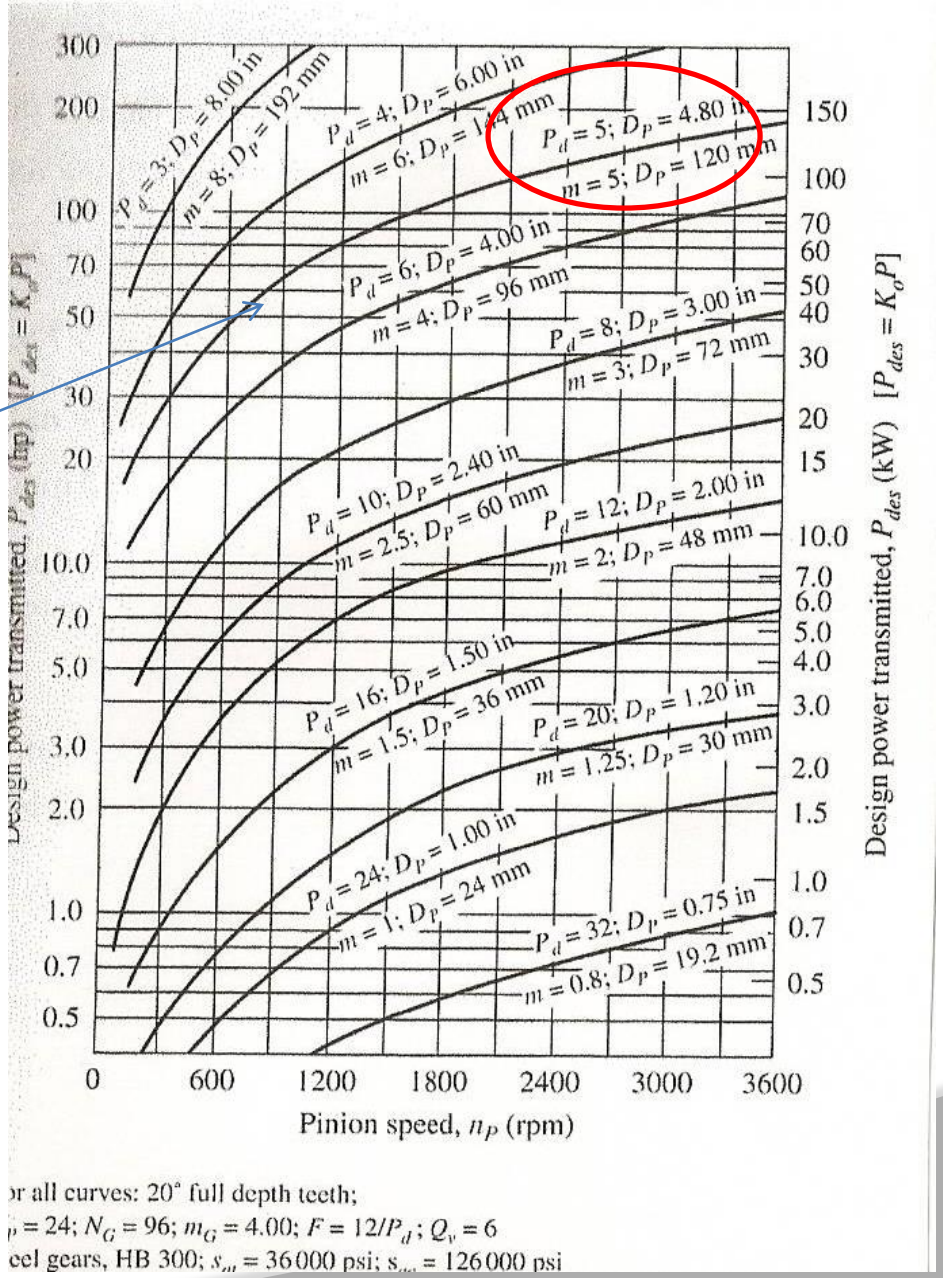

Check physical size!!

Center Distance

$$C = \left(\frac{(D_p + D_G)}{2}\right) = \frac{4.80\ in + 14.2\ in}{2} = 9.5\ \text{in}$$

Pitch Line Speed

$$V_t = \frac{\pi D_p n_p}{12} = \frac{(\pi)(4.80\ in)(550\ rpm)}{12} = 691.15\ \frac{ft}{min}$$

Tangential Load

$$W_t = \frac{33000 \times Input\ Horse\ Power}{V_t} = \frac{(33000)(20\ hp)}{691.15\ {}^{ft}/_{min}} = 955\#$$

Note: Use Input Power Here as Ko is applied Later!

Face Width

$$\frac{8}{P_d} < F < \frac{16}{P_d} \qquad F = \frac{12}{P_d} = Nominal = \frac{12}{5} = 2.4\ in$$

Assumptions:

Design Decisions

Quality Number, $Q_v = 6$ (Table 9-2, Page 378)

Steel Pinion
Steel Gear
$C_p = 2300$ (Table 9-9, Page 400)

More precision, higher quality number!

TABLE 9–2 Recommended AGMA quality numbers

Application	Quality number	Application	Quality number
Cement mixer drum drive	3–5	Small power drill	7–9
Cement kiln	5–6	Clothes washing machine	8–10
Steel mill drives	5–6	Printing press	9–11
Grain harvester	5–7	Computing mechanism	10–11
Cranes	5–7	Automotive transmission	10–11
Punch press	5–7	Radar antenna drive	10–12
Mining conveyor	5–7	Marine propulsion drive	10–12
Paper-box-making machine	6–8	Aircraft engine drive	10–13
Gas meter mechanism	7–9	Gyroscope	

Machine tool drives and drives for other high-quality mechanical systems

Pitch line speed (fpm)	Quality number	Pitch
0–800	6–8	
800–2000	8–10	
2000–4000	10–12	
Over 4000	12–14	O

TABLE 9–9 Elastic coefficient, C_p

Pinion material	Modulus of elasticity, E_P, lb/in^2 (MPa)	Gear material and modulus of elasticity, E_G, lb/in^2 (MPa): Steel 30×10^6 (2×10^5)	Malleable iron 25×10^6 (1.7×10^5)	Nodular iron 24×10^6 (1.7×10^5)	Cast iron 22×10^6 (1.5×10^5)	Aluminum bronze 17.5×10^6 (1.2×10^5)	Tin bronze 16×10^6 (1.1×10^5)
Steel	30×10^6 (2×10^5)	2300 (191)	2180 (181)	2160 (179)	2100 (174)	1950 (162)	1900 (158)
Mall. iron	25×10^6 (1.7×10^5)	2180 (181)	2090 (174)	2070 (172)	2020 (168)	1900 (158)	1850 (154)
Nod. iron	24×10^6 (1.7×10^5)	2160 (179)	2070 (172)	2050 (170)	2000 (166)	1880 (156)	1830 (152)
Cast iron	22×10^6 (1.5×10^5)	2100 (174)	2020 (168)	2000 (166)	1960 (163)	1850 (154)	1800 (149)
Al. bronze	17.5×10^6 (1.2×10^5)	1950 (162)	1900 (158)	1880 (156)	1850 (154)	1750 (145)	1700 (141)
Tin bronze	16×10^6 (1.1×10^5)	1900 (158)	1850 (154)	1830 (152)	1800 (149)	1700 (141)	1650 (137)

Source: Extracted from AGMA Standard 2001-C95, *Fundamental Rating Factors and Calculation Methods for Involute Spur and Helical Gear Teeth,* with the permission of the publisher, American Gear Manufacturers Association, 1500 King Street, Suite 201, Alexandria, VA 22314.
Note: Poisson's ratio = 0.30; units for C_p are $(\text{lb/in}^2)^{0.5}$ or $(\text{MPa})^{0.5}$.

Softer material, more relative deformation, therefore contact area increases and stress decreases

Geometry Factors

FIGURE 9–17
Geometry factor, J (Extract from AGMA 218.01 Standard, *Rating the Pitting Resistance and Bending Strength of Spur and Helical Involute Gear Teeth*, with the permission of the publisher, American Gear Manufacturers Association, 1500 King Street, Suite 201, Alexandria, VA 22314)

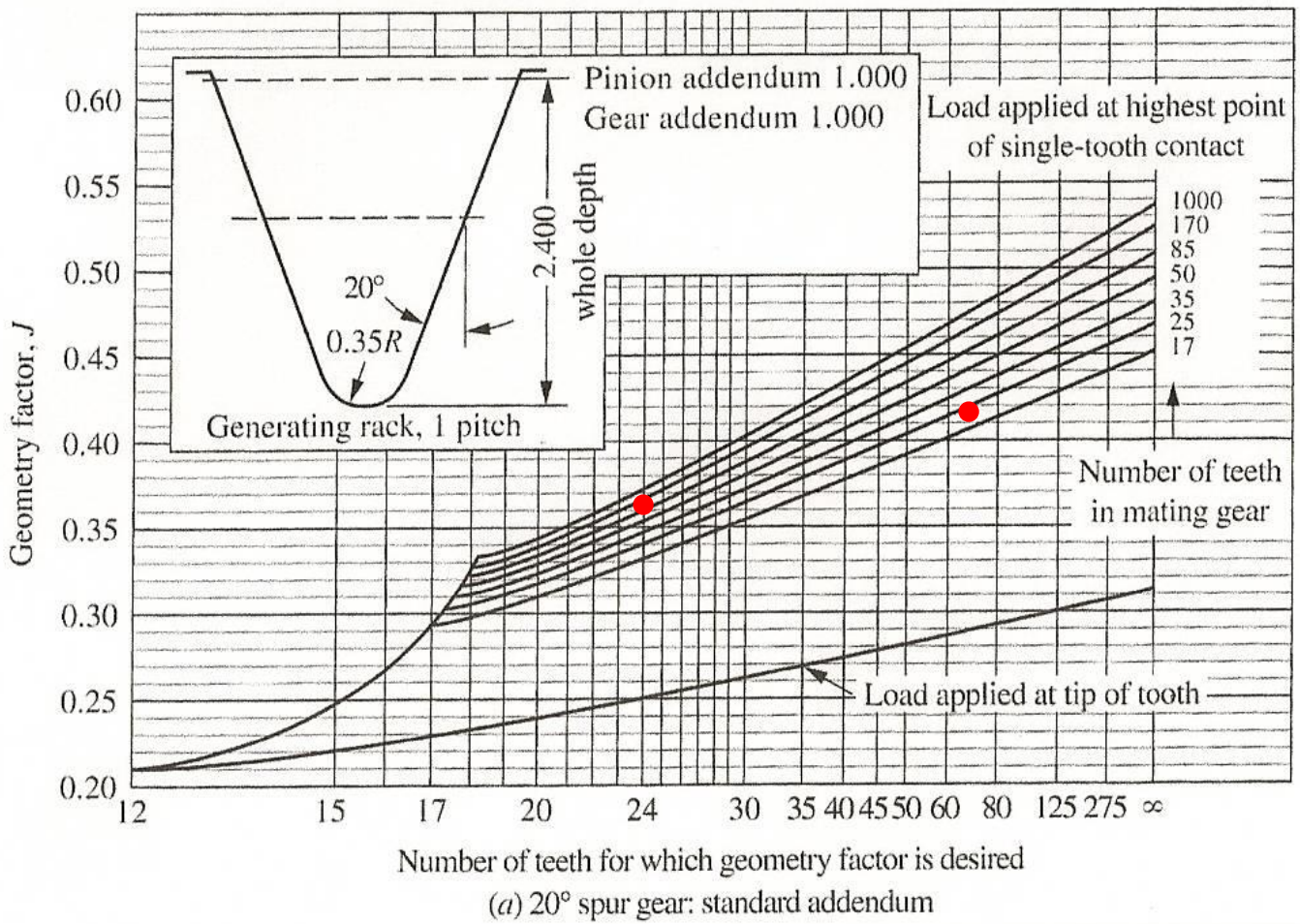

(a) 20° spur gear: standard addendum

Pinion: $J_P = .36$
Gear: $J_G = .415$
Figure 9-17, Page 387

Geometry Factors Cont…

$$Gear\ Ratio = \frac{N_G}{N_p} = \frac{71}{24} = 2.96$$

Page 402

FIGURE 9–23
External spur pinion geometry factor, *I*, for standard center distances. All curves area for the lowest point of single-tooth contact on the pinion. (Extracted from AGMA Standard 218.01, *Rating the Pitting Resistance and Bending Strength of Spur and Helical Involute Gear Teeth*, with the permission of the publisher, American Gear Manufacturers Association, 1500 King Street, Suite 201, Alexandria, VA 22314)

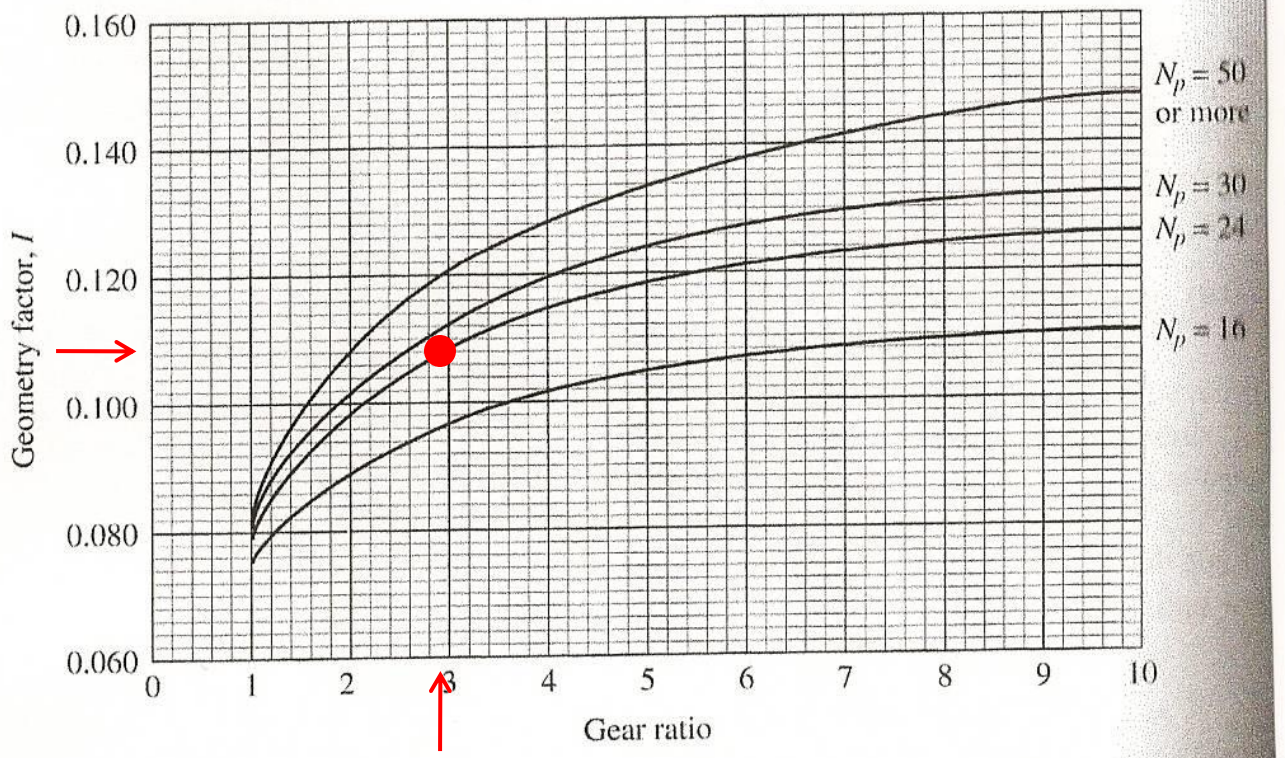

(*a*) 20° pressure angle, full-depth teeth (standard addendum = $1/P_d$)

I = .108

Load Distribution Factor

$K_m = 1 + C_{pf} + C_{ma}$ *Equation 9-16, Page 390; Equation is solved on next slide*

Page 391

Section 9–8 ▪ Stresses in Gear Teeth

FIGURE 9–18 Pinion proportion factor, C_{pf} (Extracted from AGMA 2001-C95 *Standard, Fundamental Rating Factors and Calculation Methods for Involute Spur and Helical Gear Teeth*, with permission of the publisher, American Gear Manufacturers Association, 1500 King Street, Suite 201, Alexandria, VA 22314)

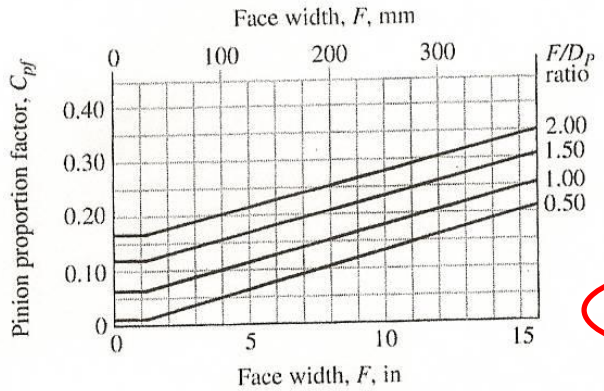

D_p = Pinion diameter

For $F/D_p < 0.50$, use curve for $F/D_p = 0.50$

When $F \leq 1.0$ in. ($F \leq 25$ mm)

$$C_{pf} = \frac{F}{10D_p} - 0.025$$

When $1.0 \leq F < 15$,

$$C_{pf} = \frac{F}{10D_p} - 0.0375 + 0.0125F$$

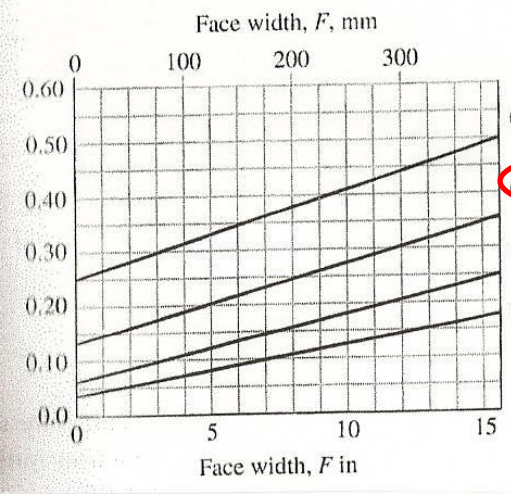

Open gearing $C_{ma} = 0.247 + 0.0167F - 0.765 \times 10^{-4}F^2$

Commercial enclosed gear units $C_{ma} = 0.127 + 0.0158F - 1.093 \times 10^{-4}F^2$

Precision enclosed gear units $C_{ma} = 0.0675 + 0.0128F - 0.926 \times 10^{-4}F^2$

Extra-precision enclosed gear units $C_{ma} = 0.0380 + 0.0102F - 0.822 \times 10^{-4}F^2$

Load Distribution Factor Cont…

$$C_{pf} = \frac{F}{(10)(D_p)} - .0375 + (.0125)(F) = \frac{2.4\ in}{(10)(4.80\ in)} - .0375 + (.0125)(2.4\ in) = .0425$$

$$C_{ma} = .127 + (.0158)(F) - (1.093 \times 10^{-4})(F^2)$$

$$C_{ma} = .127 + (.0158)(2.4\ in) - (1.093 \times 10^{-4})(2.4\ in^2) = .1643$$

$$K_m = 1 + .0425 + .1643 = 1.2068$$

Size Factor

Page 389

TABLE 9–6 Suggested size factors, K_s

Diametral pitch, P_d	Metric module, m	Size factor, K_s
≥5	≤5	1.00
4	6	1.05
3	8	1.15
2	12	1.25
1.25	20	1.40

$k_s = 1.0$ since $P_d \geq 5$

Rim Thickness Factor

FIGURE 9–20 Rim thickness factor, K_B (Extracted from AGMA 2001-C95 Standard, *Fundamental Rating Factors and Calculation Methods for Involute Spur and Helical Gear Teeth*, with permission of the publisher, American Gear Manufacturers Association, 1500 King Street, Suite 201, Alexandria, VA 22314)

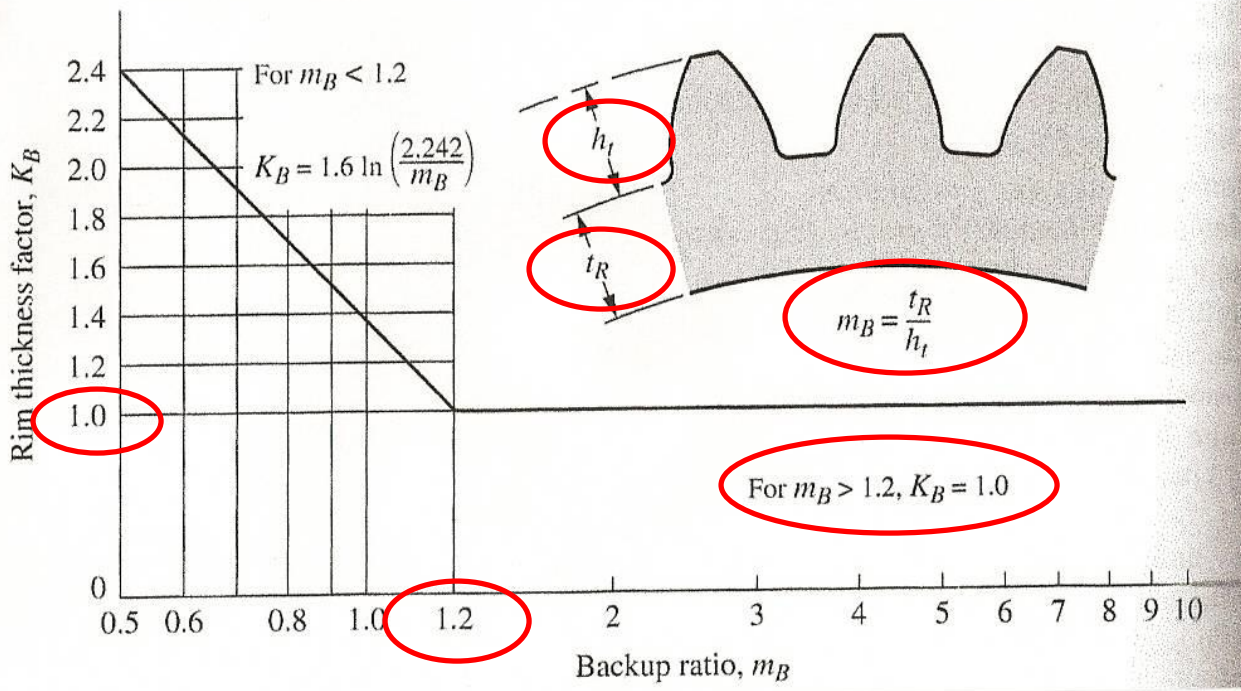

For this problem, specify a solid gear blank $K_B = 1.00$

$K_B = 1.00$ for $m_B = 1.2$ or larger

Rim Thickness Factor Cont…

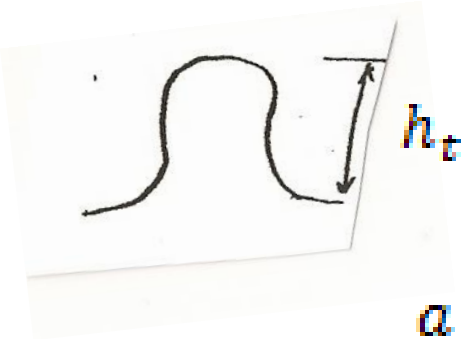

$$h_t = 2a + c$$

$$a = \frac{1}{P_d} = \frac{1}{5}$$

$$c = \frac{.25}{P_d} = \frac{.25}{5} = .05$$

$$h_t = (2)\left(\frac{1}{5}\right) + (.05) = .45\ in$$

We are assuming a solid gear blank for this problem, but if not then use:

Min Rim Thickness = (1.2)(.45 in) = .54 in

Min back-up ratio

Safety Factor

S_F = 1.25 (Mid-Range)

Hardness Ratio

C_H =1.00 for early trials until materials have been specified. Then adjust C_H if significant differences exist in the hardness of the pinion and the gear.

Reliability

Page 396 **TABLE 9–8** Reliability factor, K_R

Reliability	K_R
0.90, one failure in 10	0.85
0.99, one failure in 100	1.00
0.999, one failure in 1000	1.25
0.9999, one failure in 10 000	1.50

K_R = 1.5 (for 1 in 10,000 failures)

Dynamic Factor K_v

Page 393

FIGURE 9–21
Dynamic factor, K_V (Extracted from AGMA 2001-C95 Standard *Fundamental, Rating Factors and Calculation Methods for Involute Spur and Helical Gear, Teeth.* with the permission of the publisher, American Gear Manufacturers Association, 1500 King Street, Suite 201, Alexandria, VA 22314)

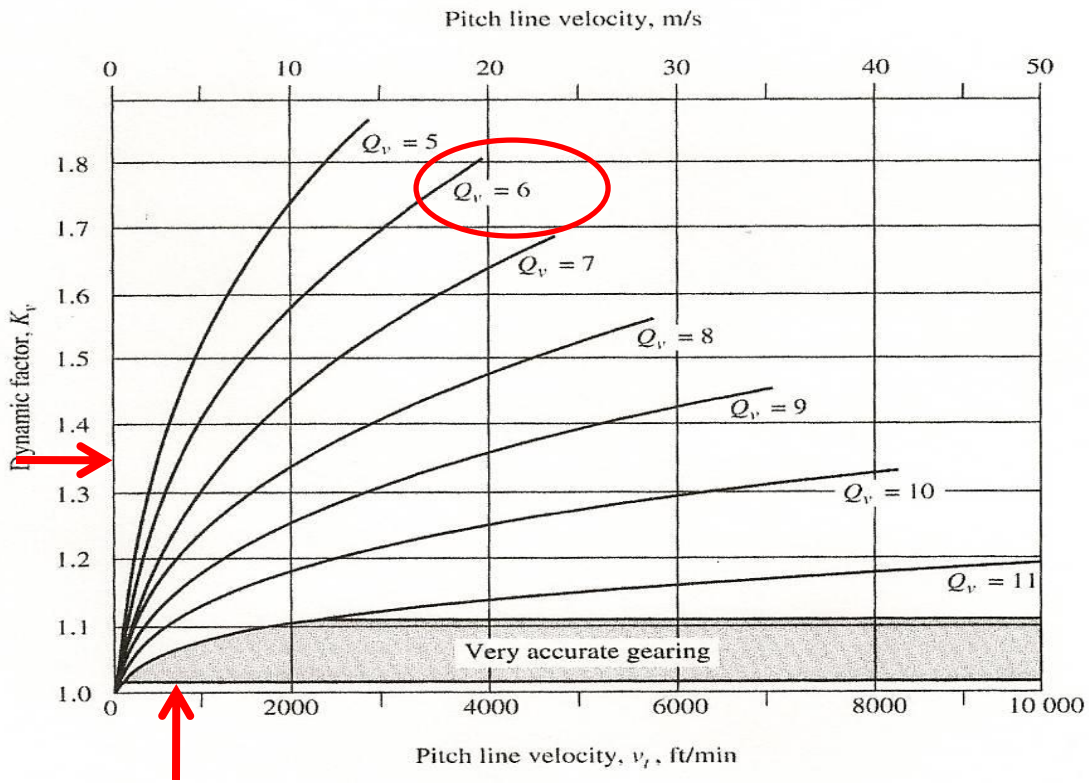

$$v_{t\,max} = [A + (Q_v - 3)]^2 \quad \text{(U.S. units)}$$

$$v_{t\,max} = \frac{[A + (Q_v - 3)]^2}{200} \quad \text{(SI units)}$$

where $v_{t\,max}$ = end-point of K_v curves (ft/min or m/s)

Curves 5–11

$$K_v = \left(\frac{A + \sqrt{v_t}}{A}\right)^B \quad \text{(U.S. units)}$$

$$K_v = \left(\frac{A + \sqrt{200 v_t}}{A}\right)^B \quad \text{(SI units)}$$

where $A = 50 + 56(1.0 - B)$

$$B = \frac{(12 - Q_v)^{0.667}}{4}$$

Q_v = transmission accuracy grade number

Dynamic Factor Cont… K_v

$$B = \frac{(12 - Q_v)^{.667}}{4} = \frac{(12 - 6)^{.667}}{4} = .826$$

$$A = 50 + (56)(1 - B) = 50 + (56)(1 - .826) = 59.745$$

$$K_v = \left(\frac{A + \sqrt{V_t}}{A}\right)^B = \left(\frac{59.745 + \sqrt{691.15}\, ft/_{min}}{59.745}\right)^{.826} = 1.352$$

Q_v comes from Figure 9-21

K_v can be calculated like in above equations or taken from Figure 9-21. Equations are more accurate.

Design Life

$N_{cp} = (60)(L)(n)(q)$
L = 30,000 hours *from Table 9-7*
n = 550 rpm
q = 1 contacts

N_{cp} = (60)(30,000 hours)(550 rpm)(1 contact) = 9.9×10^8 cycles

N_{cG} = (60)(30,000 hours)(185.92 rpm)(1 contact) = 3.34656×10^8 cycles

Stress Cycle Factors

$$Y_{NP} = (1.6831)(N_{cp})^{-.0323} = (1.6831)(9.9x10^8)^{-.0323} = .862$$

$$Y_{NG} = (1.6831)(N_{cG})^{-.0323} = (1.6831)(3.34656x10^8)^{-.0323} = .893$$

Page 395

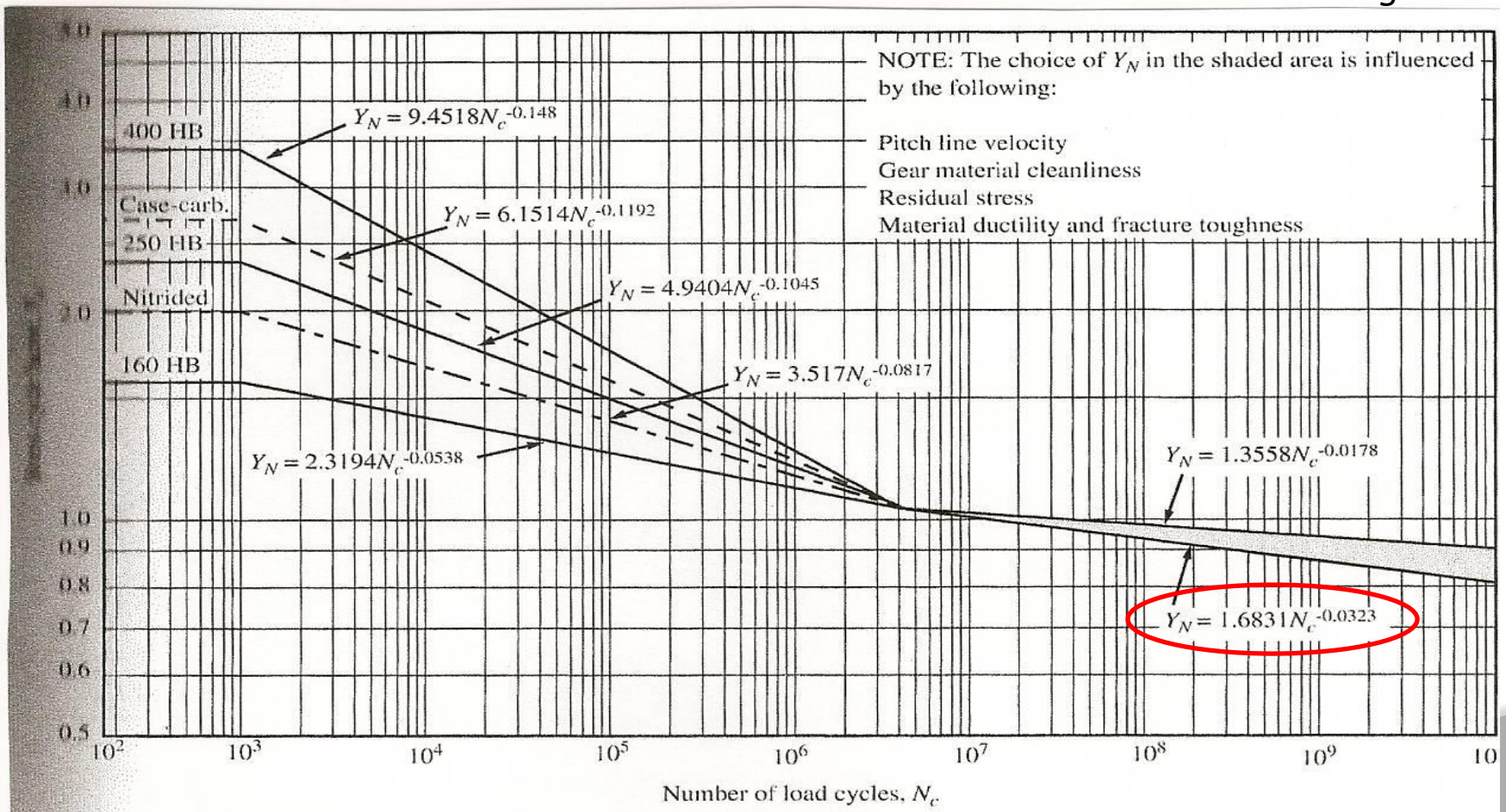

FIGURE 9–22 Bending strength stress cycle factor, Y_N (Extracted from AGMA Standard 2001-C95, *Fundamen Rating Factors and Calculation Methods for Involute Spur and Helical Gear Teeth,* with permission of the publish American Gear Manufacturers Association, 1500 King Street, Suite 201, Alexandria, VA 22314)

Stress Cycle Factors Cont…

$$Z_{NP} = (2.466)(N_{cp})^{-.056} = (2.466)(9.9x10^8)^{-.056} = .773$$

$$Z_{NG} = (2.466)(N_{cG})^{-.056} = (2.466)(3.34656x10^8)^{-.056} = .822$$

Page 403

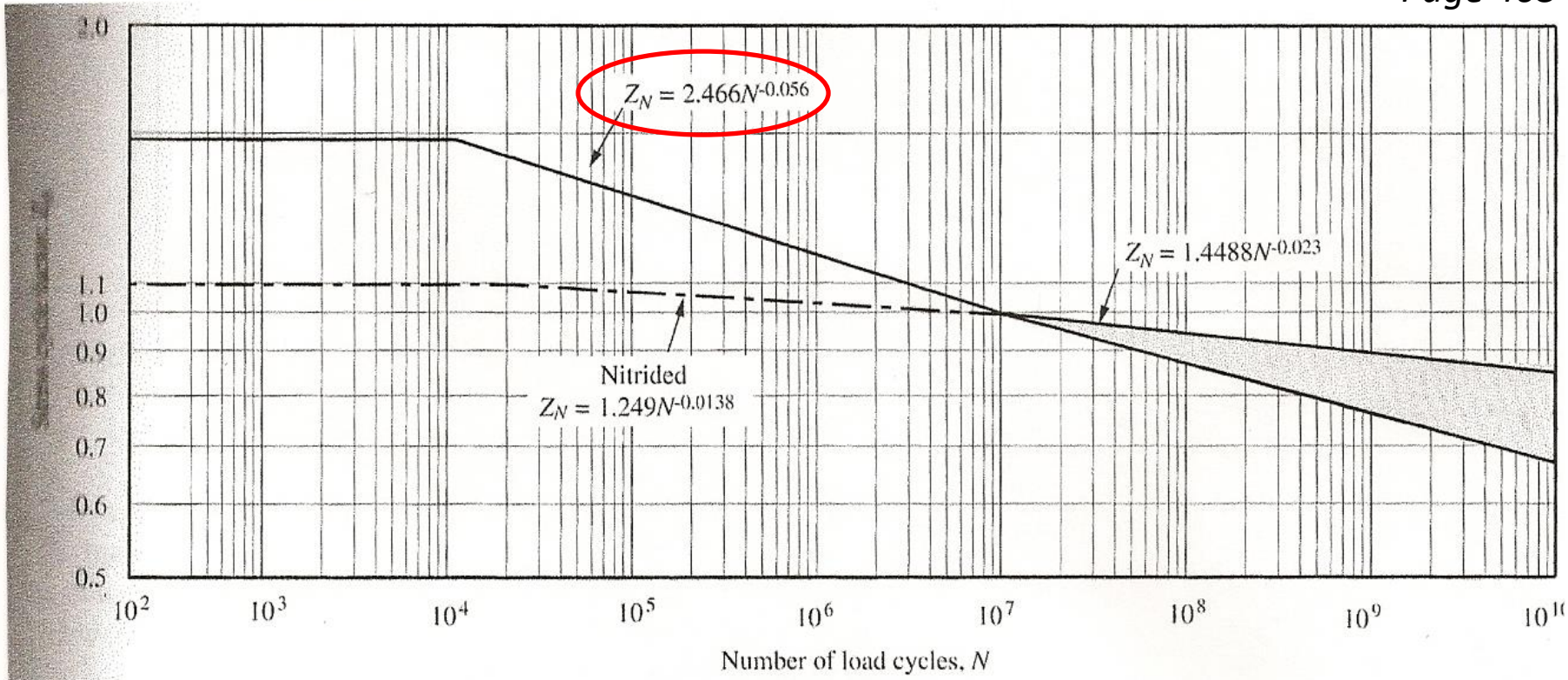

FIGURE 9–24 Pitting resistance stress cycle factor, Z_N (Extracted from AGMA Standard 2001-C95, *Fundamental Rating Factors and Calculation Methods for Involute Spur and Helical Gear Teeth*, with permission of the publisher, American Gear Manufacturers Association, 1500 King Street, Suite 201, Alexandria, VA 22314)

Bending Stress Numbers

Pinion:

$$S_{tp} = \left(\frac{(W_t)(P_d)}{(F)(J_p)}\right)(K_o K_s K_m K_B K_v)$$

$$S_{tp} = \left(\frac{(955)(5)}{(2.4)(.36)}\right)(1.75 \times 1.0 \times 1.2068 \times 1.0 \times 1.352) = 15{,}780.1 psi$$

Gear:

$$S_{tG} = S_{tp}\left(\frac{J_p}{J_G}\right)$$

$$S_{tG} = 15{,}780.1\ psi\left(\frac{.36}{.415}\right) = 13{,}688.8\ psi$$

Required Bending Stress Allowable:

$$(S_{at})_p = \frac{S_F \times K_R}{Y_{NP}} \times S_{tp} = \left(\frac{(1.25)(1.5)}{.862}\right)(15{,}780.1\ psi) = 34{,}324.5\ psi$$

$$(S_{at})_G = \frac{S_F \times K_R}{Y_{NG}} \times S_{tG} = \left(\frac{(1.25)(1.5)}{.893}\right)(13{,}688.8\ psi) = 28{,}741.9\ psi$$

Contact Stress Number

$$S_c = C_p \sqrt{\left(\frac{W_t \times K_o \times K_s \times K_m \times K_v}{F \times D_p \times I}\right)}$$

$$S_c = 2300 \sqrt{\left(\frac{(955\#)(1.75)(1.0)(1.2068)(1.352)}{(2.4)(4.80\ in)(.108)}\right)} = 107{,}675\ psi$$

Required Contact Stress Allowable:

Pinion:

$$(S_{ac})_p = \frac{K_R \times S_F}{Z_{NP}} \times S_c$$

$$(S_{ac})_p = \frac{(1.5)(1.25)}{.773}(107{,}675\ psi) = 261{,}178\ psi$$

Gear:

$$(S_{ac})_G = \frac{K_R \times S_F}{Z_{NG} \times C_H} \times S_c$$

$$(S_{ac})_G = \frac{(1.5)(1.25)}{(.822)(1.0)}(107{,}675\ psi) = 245{,}609\ psi$$

Hardness Numbers BENDING (Grade 1)

Page 379

FIGURE 9–10
Allowable bending stress number for through-hardened steel gears, s_{at} (Extracted from AGMA 2001-C95 Standard, *Fundamental Rating Factors and Calculation Methods for Involute Spur and Helical Gear Teeth*, with permission of the publisher, American Gear Manufacturers Association, 1500 King Street, Suite 201, Alexandria, VA 22314)

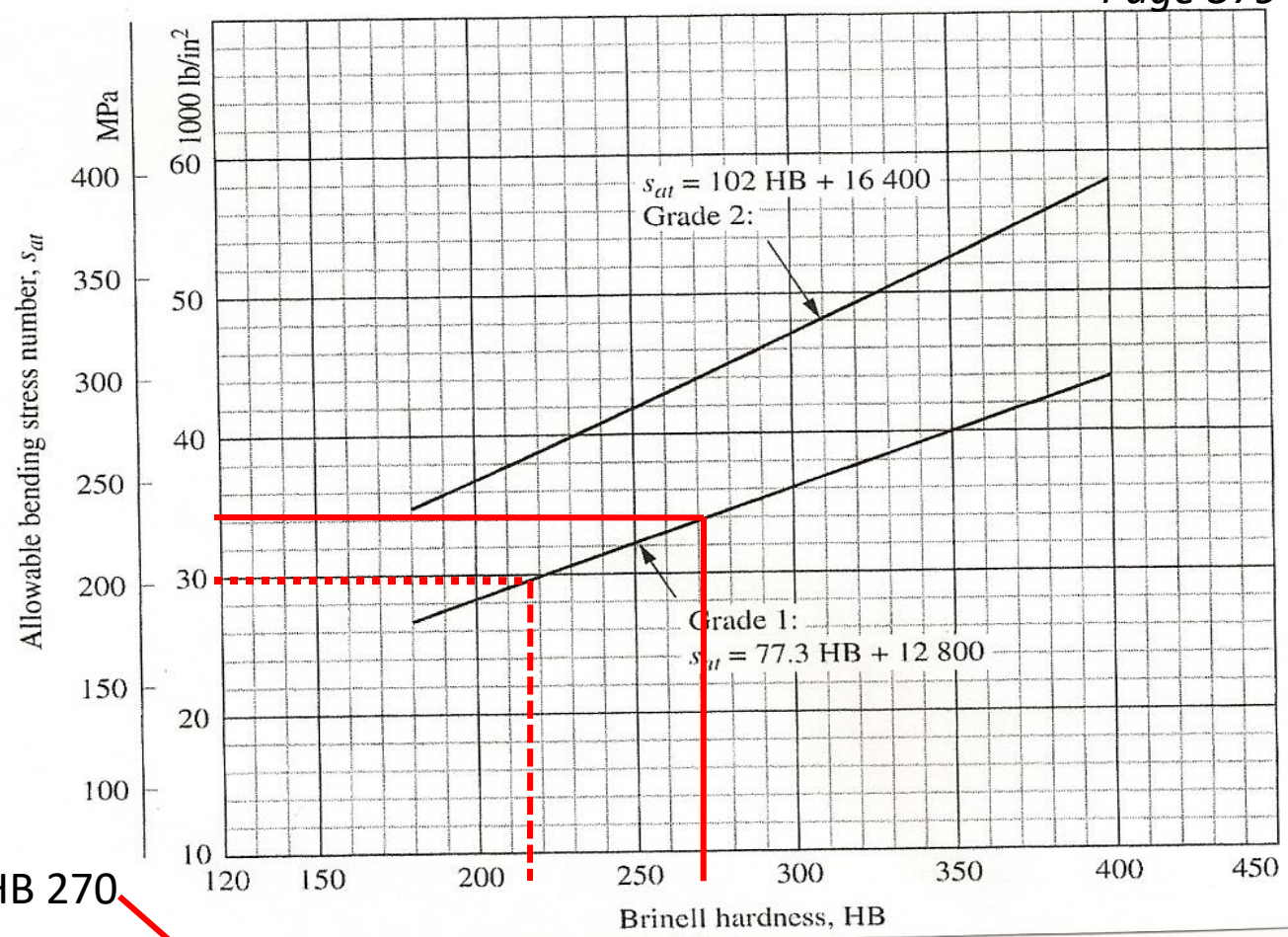

Pinion Bending

S_{atp} = 34,324.5 psi = HB 270

Gear Bending

S_{atG} = 28,741.9 psi = HB 215

These stresses are OK

Go to appendix A3 or A4 and spec out material that meets this hardness requirement! Example AISI 1040, Temper at 900 F

Hardness Numbers CONTACT (Grade 1)

Page 380

FIGURE 9–11
Allowable contact stress number for through-hardened steel gears, s_{ac} (Extracted from AGMA 2001-C95 Standard, *Fundamental Rating Factors and Calculation Methods for Involute Spur and Helical Gear Teeth*, with permission of the publisher, American Gear Manufacturers Association, 1500 King Street, Suite 201, Alexandria, VA 22314)

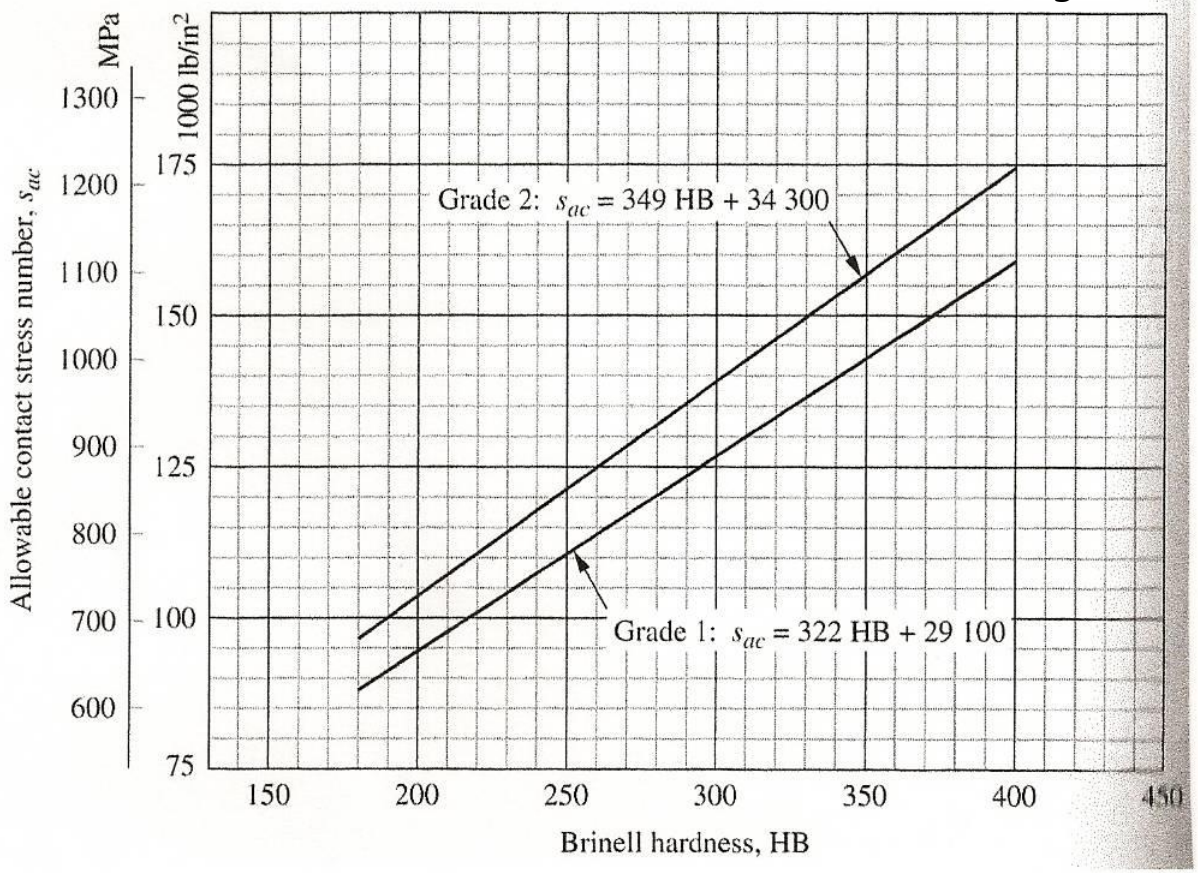

Pinion Contact

S_{acp} = 261,178 psi

Gear Contact

S_{acG} = 245,609 psi

These Stresses are WAY too HIGH!
Values are off table!